LSLV-S100 REMOTE KEYPAD

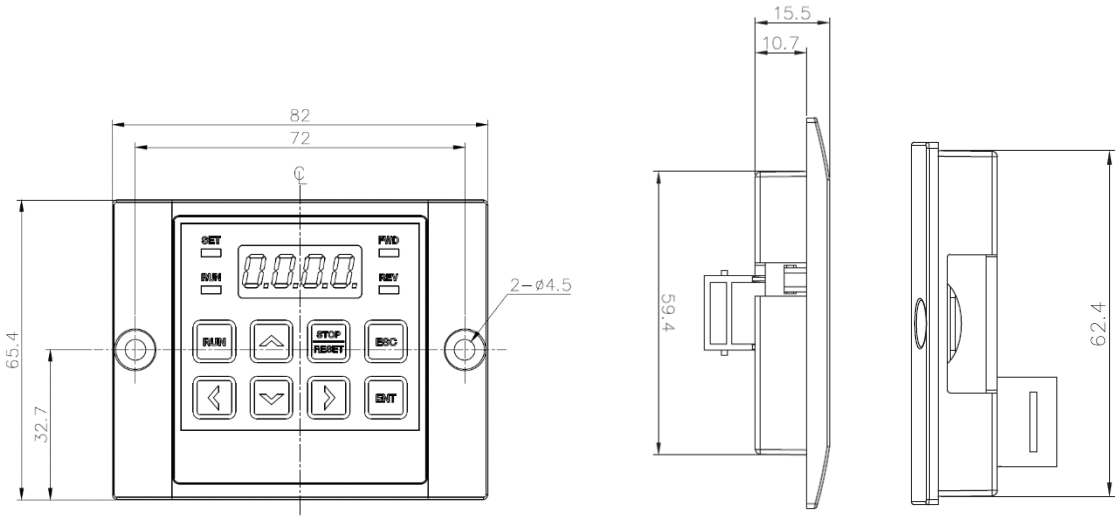

Scale : mm

Installation.

1 Take off the top cover of the I/O board kit and remove the hole cover to connect remote cable on the side.
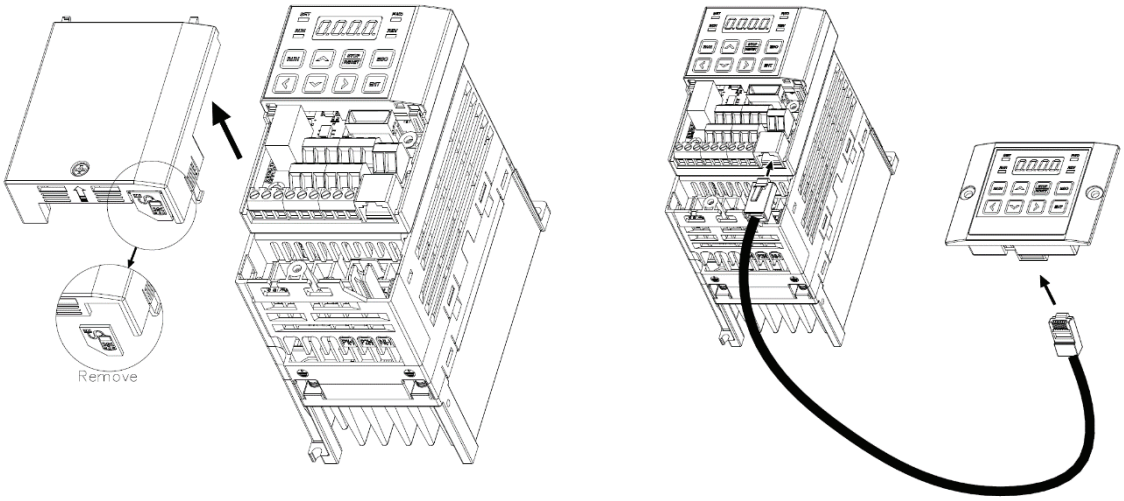
2 Connect the other side of the remote cable to the remote keypad as shown below.