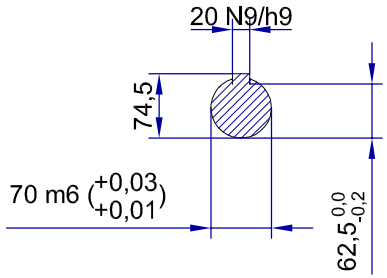

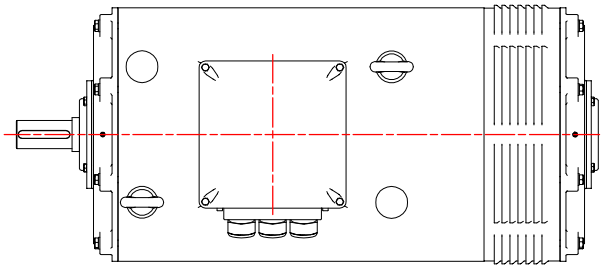

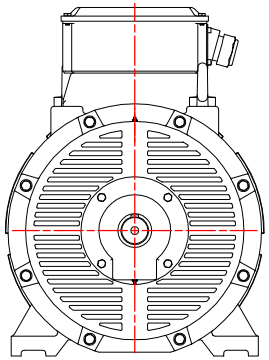

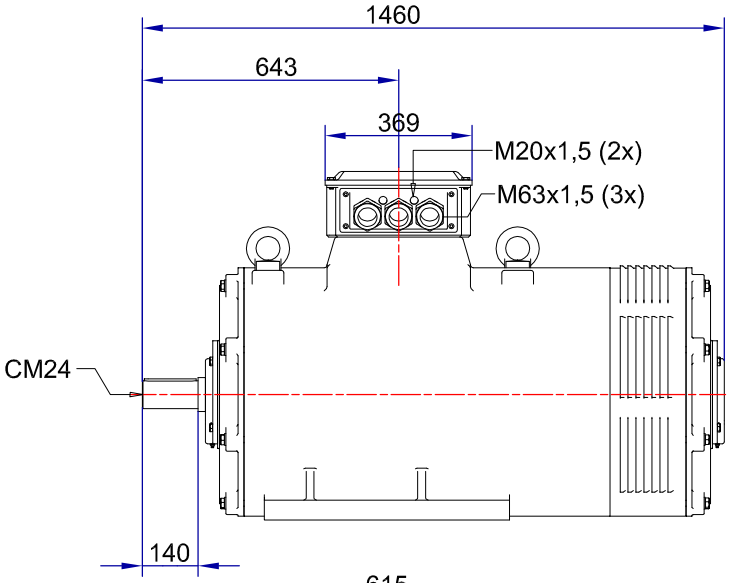

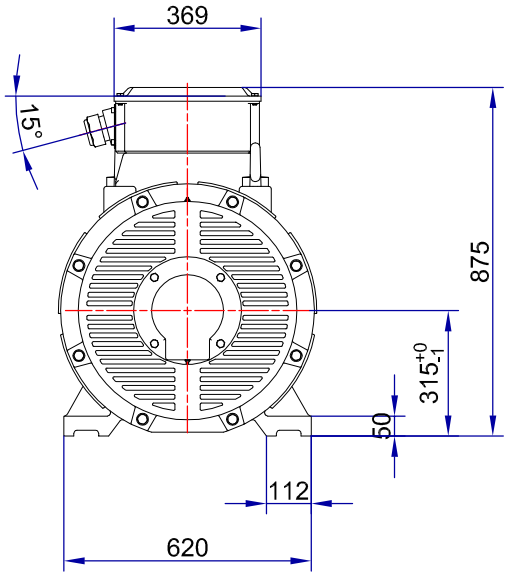

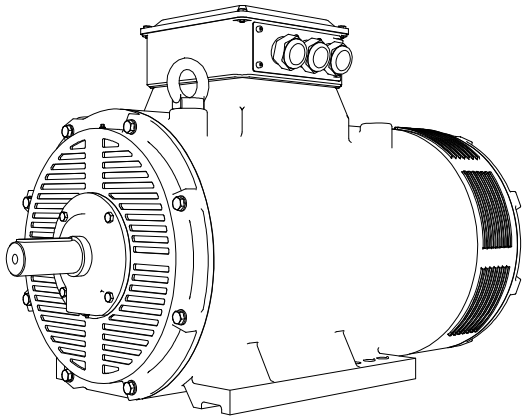

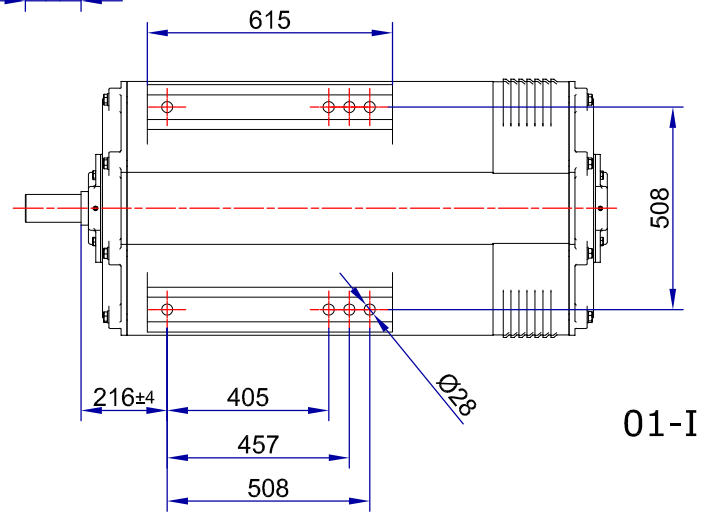

01-IP23-Cast Iron-IE3-315B B3-2