ANTRIEBSTECHNIK
SEVA TEC
ENERGIEANLAGEN

Operating Instructions Horizontal Helical Gear Unit - Series H

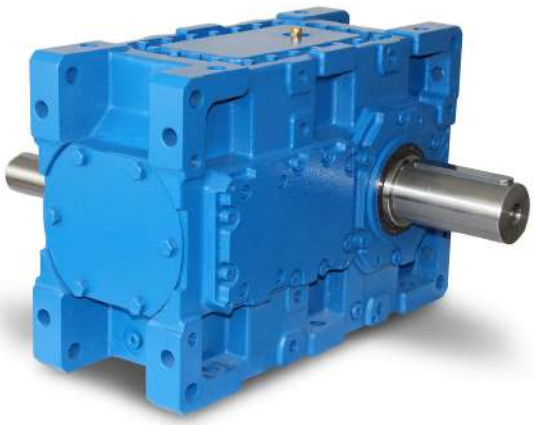

Content.. 02
1 - How to Use This Manual 05
2 - Unit Designation 06

2.1- Detailed Unit Designation **06**
2.2- Nameplate, Unit Designation **07**

3. Standard Type Gearbox Parts Lists 08

3.1- HT..2.00 type 08
3.2- HT..2.0S type 09
3.3- HT..2.01 type 10
3.4- HT..2.02 type 11
3.5- HT..2.03 type 12
3.6- HT..2.04 type 13
3.7- HT..2.05 type 14
3.8- HT..2.08 type 15
3.9- HTE.2.0E type 16
3.10- HT..3.00 type 17
3.11- HT..3.0S type 18
3.12- HT..3.01 type 19
3.13- HT..3.02 type 20
3.14- HT..3.03 type 21
3.15- HT..3.04 type 22
3.16- HT..3.05 type 23
3.17- HT..3.08 type 24
3.18- HTE.3.0E type 25
3.19- HT..4.00 type 26
3.20- HT..4.0S type 27
3.21- HT..4.01 type 28
3.22- HT..4.02 type 29
3.23- HT..4.03 type 30
3.24- HT..4.04 type 31
3.25- HT..4.05 type 32
3.26- HT..4.08 type 33

4- Safety 34

4.1- Intended use **34**
4.2- Improper use **34**
4.3- Safety Instructions **35**
4.3.1- General safety instructions **35**
4.3.1.1- Working on the gearbox **35**
4.3.1.2- Operation **35**
4.3.1.3- Maintenance **35**
4.3.1.4- Lubrication **35**
4.3.1.5- Ambient Conditions **35**

Content

4.4- Tightening torques....36
4.5- In Case of fire....36
4.5.1- Suitable extinguishing agents, Protective equipment....36
4.5.2- Unsuitable extinguishing agents....36

5 - Checks to be carried out before gearbox installation....37

5.1- Transportation....37
5.2- Storage....38

6- Installing the Gearb Unit....38

6.1- Before you start....38
6.2- Check the Shaft Dimensions to Fit....39
6.3- Check the Ambient Temperature....39
6.4- Check the Voltage Supply....39
6.5- Check the Mounting Position....42
6.6- Usage of Breather Plug....42
6.7- Check the Oil Level....42
6.8- Check Shaft Ends and Mounting Surfaces....42
6.9- Cover Against Corrosive Ambient....42
6.10- Check Accessibility to Filling, Breather and Drain Plugs....43

7- Mechanical Installation....43

7.1- Installing customer shaft with shoulder....44
7.2- Disassembling customer shaft with shoulder....45
7.3- Fitting Output Shaft Elements....47
7.4- Correct position of output shaft elements....47
7.5- Fitting Couplings....48
7.6- Shaft tightening torques....49
7.7- Recommended Shaft Dimensions for H...00 Types....50

8- Maintenance & Inspections....51

9- Lubrication....52

9.1- Oil types....52
9.2- Changing the oil....53
9.3- Oil quantities (l)....53
9.4- Oil plugs....54
9.5- Mounting positions....56

10- Cooling Options.....57

10.1- Fan cooling.....**58**
10.2- Cooling with cooling coil.....**58**
10.3- Cooling with Heat Exchanger **59**
10.4- Cooling with air / oil heat exchanger.....**60**

11- Troubleshooting Guide.....61

12- Disposal.....64

12.1- Disposal of oil..... **64**
12.2- Disposal of seals..... 64
12.3- Disposal of metal parts.....**64**

1- How To Use This Manual

Please pay attention to the following safety and warning instructions.

Electrical Hazard ; Can cause severe or fatal injuries.

Mechanical Hazard; Can cause severe or fatal injuries.

Likely to be Hazardous; Can cause minor or fatal injuries.

Damage Risk; Can damage gearbox or environment.

Important Information.

EC Machinery Directive:
Within terms of the EC machinery directive 2006/42/EC, the gearboxes are not considered as autonomous machines.
Operation is prohibited within the area of validity of the EC directive, until it has been determined that the machine, in which this product is installed, corresponds to the regulations within this directive.

The operating instructions contain important information to ensure
- Trouble-free operation
- Fulfilment of any rights to claim under guarantee

These operating instructions must be stored close to the gearbox and must be available in case they are needed.

These operating instructions are written for H series gear units and are only applicable for H series. If any different type of gearbox is used please ask SEVA-tec GmbH for the operating instructions of that type.

These instructions can only be used for standard type SEVA-tec GmbH gear units. For special application and modified gear units ask SEVA-tec GmbH for validity.

This manual does not cover 94/9/EC compatible gearboxes. For 94/9/EC contact JS-Technik GmbH.

2 - Unit Designation

2.1- Detailed Unit Designation

Detailed H series gear units designation for ordering
(This Designation is different from the short nameplate designation)

H T 05 2 3 . 0 1 R - M1 / A28

IEC Motor Flange Size
Only for HK types
A13: *IEC 132 B5 (300x265x230 mm)*
A16: *IEC 160 B5 (350x300x250 mm)*
A18: *IEC 180 B5 (350x300x250 mm)*
A20: *IEC 200 B5 (400x350x300 mm)*
A22: *IEC 225 B5 (450x400x350 mm)*
A25: *IEC 250 B5 (550x500x450 mm)*
A28: *IEC 280 B5 (550x500x450 mm)*
A31: *IEC 315 B5 (660x600x550 mm)*

Mounting Position
M1: *Output shaft is parallel to the ground, cover is on top*
M2: *Gearbox is upright and output shaft is over input shaft*
M3: *Output shaft is parallel to the ground, cover is on the bottom*
M4: *Gearbox is upright and output shaft is under input shaft*
M5: *While the output shaft is perpendicular to the ground and the mounting cover is in front, the surface on the right side (Y1) faces downwards*
M6: *While the output shaft is perpendicular to the ground and the mounting cover is in front, the surface on the left side (Y4) faces downwards*
AX: *Gearbox works at an angle*
...T: *with torque arm*

Shaft and Flange Arrangement
Please refer to the saft and flange arrangement sections in the catalogue

Output Shaft Properties
0: *Hollow shaft*
1: *Solid output shaft*
2: *Solid output shaft and output flange*
3: *Hollow shaft and output flange*
4: *Double output shaft*
5: *Double output shaft and flange*
8: *Hollow output shaft and double output flange*
S: *Hollow shaft with shrink disk*
E: *Extruder type output*
0A: *Drywell gearbox with hollow output shaft*
1A: *Drywell gearbox with solid output shaft*
SA: *Drywell gearbox with shrink disk*

Input Shaft Properties
0: *Standard input shaft*
1: *Optional extruder type output*
2: *Double input shaft*

Number of Gear Stages
2: *Two stages*
3: *Three stages*
4: *Four stages*

Revision Number
Second revision

Gearbox Size
Sizes from 03.....to 22

Version of Gearbox
T: *Free solid input shaft*
K: *With IEC B5 flange and free input shaft*
TE: *Extruder type with free input shaft*
KE: *Extruder type with IEC B5 flange and free input shaft*
TB: *Drywell gearbox with free solid input shaft*
KE: *Drywell gearbox with IEC B5 flange and free solid input shaft*

Gear Unit Series
H: *Helical gear type horizontal industrial gear units*
B: *Helical gear type horizontal industrial gear units with bevel stage input*

2.2- Nameplate, unit designation

Nameplate unit designation is a short abbreviation of the detailed designation

A sample name plate for H Series

ANTRIEBSTECHNIK
SEVA TEC
ENERGIEANLAGEN

CE

Type:	**HT0323.00R**			
Serial N.:	**100478985**			
Power:	**22**	kW	Ratio:	**20.73**
Speed:	**68**	rpm.	M.Pos.:	**M1**
Oil:	MINERAL VG460			
Oil Qty:	**8**	lt.		

Abbreviations:
Serial N. : Serial Number
M.Pos. : Mounting Position

Type Designation;

HT0323.00 R

Type

Shaft and Flange Arrangement

Serial Number: 100478985

Viewed from input side
L - Right input, Left output
R - Left input, Right output
U - Right input, Right output
V - Left input, Left output

3. Standard Type Gearbox Parts Lists

3.1- HT...2.00 Types

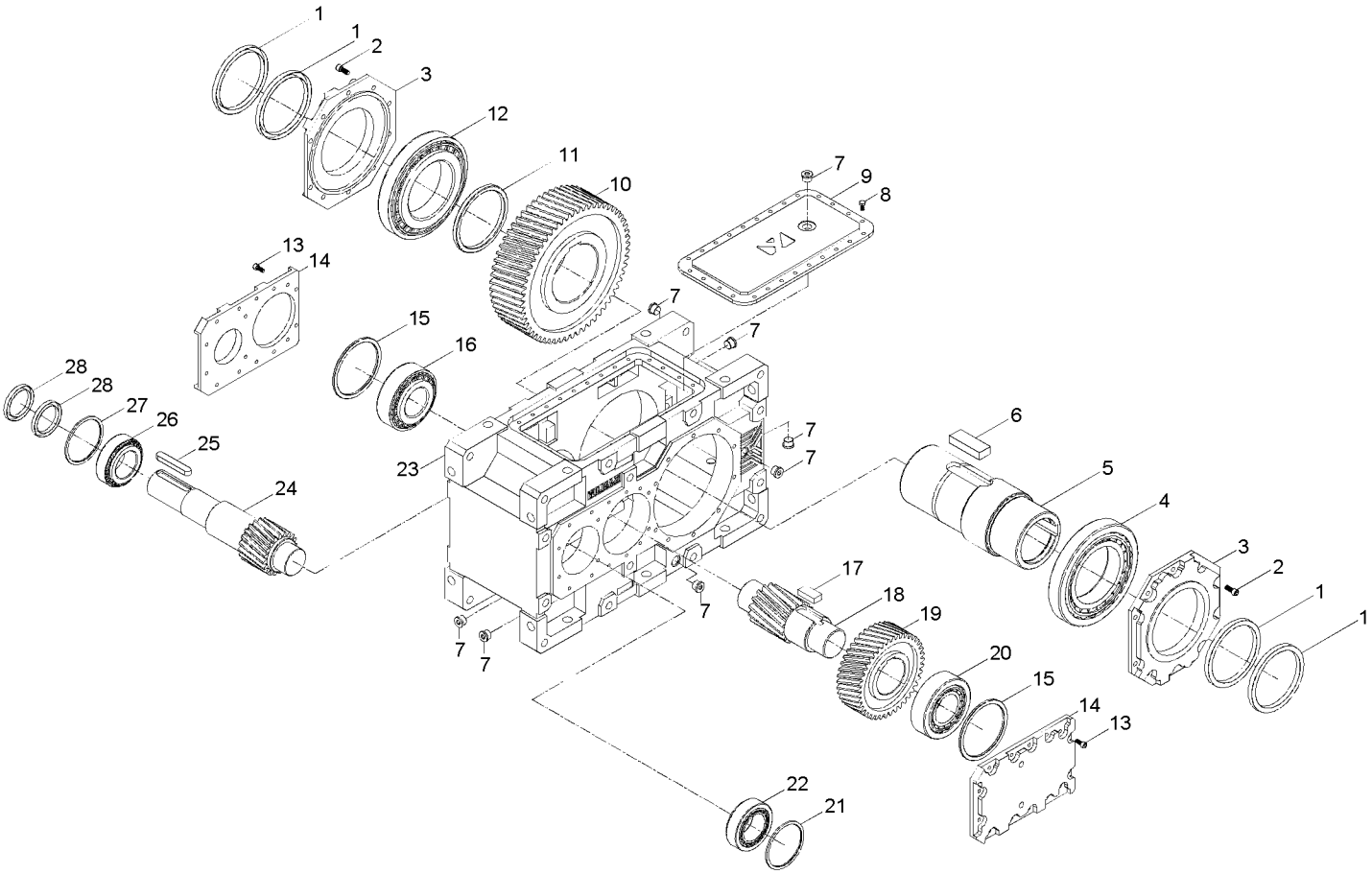

Standard HT...2.00 type basic part diagram. Parts may differ for special applications.

Standard Parts List

1- Seal	10- Gear	19- Gear	28- Seal
2- Bolt	11- Spacer	20- Bearing	
3- Seals Side Cover	12- Bearing	21- Spacer	
4- Bearing	13- Bolt	22- Bearing	
5- Hollow Output Shaft	14- Cover	23- Housing	
6- Key	15- Spacer	24- Gear	
7- Oil Plug	16- Bearing	25- Key	
8- Bolt	17- Key	26- Bearing	
9- Top Cover Plate	18- Gear	27- Spacer	

3.2- HT...2.0S Types

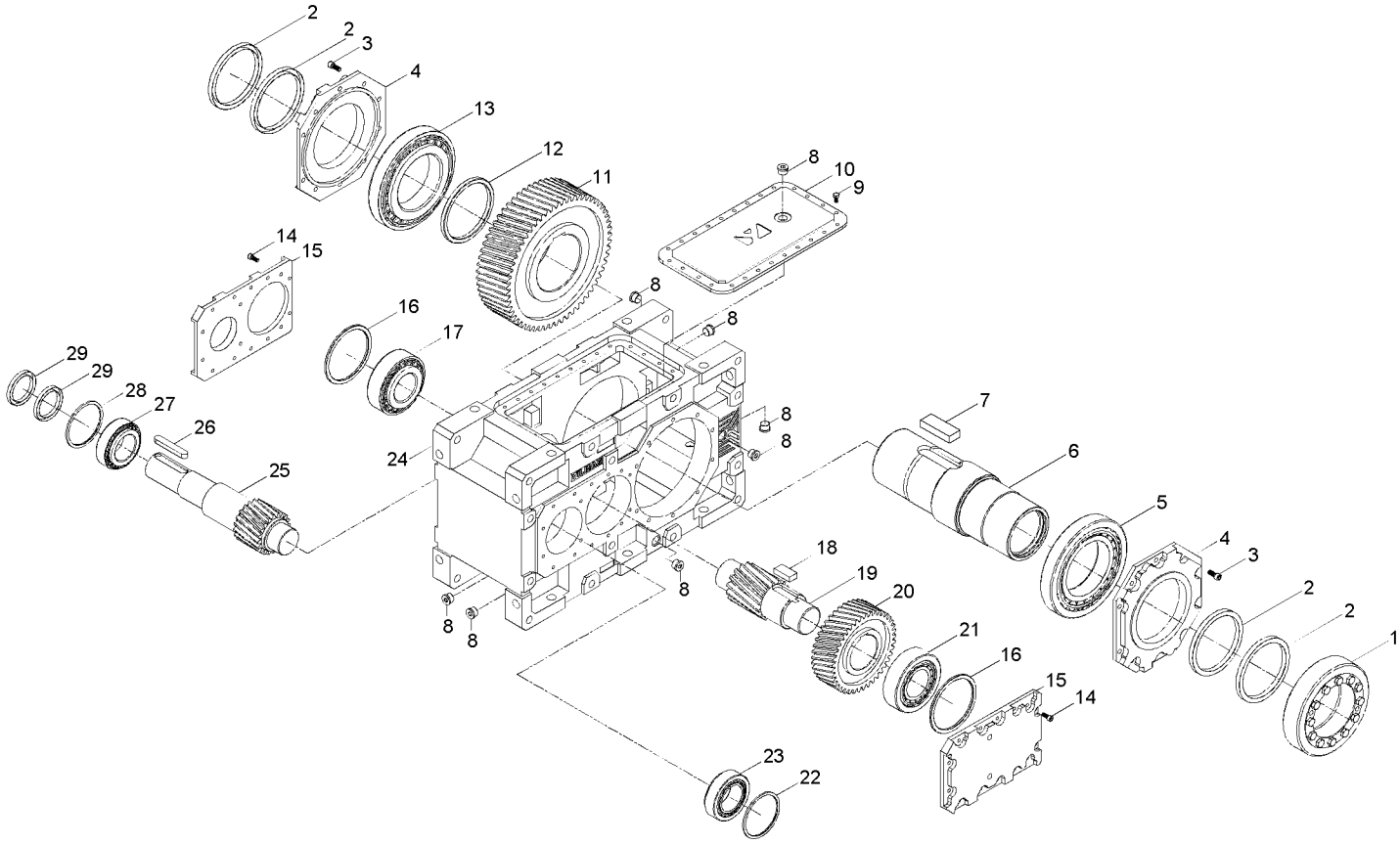

Standard HT...2.0S type basic part diagram. Parts may differ for special applications.

Standard Parts List

1- Shrink Disk	10- Top Cover Plate	19- Gear	28- Spacer
2- Seal	11- Gear	20- Gear	29- Seal
3- Bolt	12- Spacer	21- Bearing	
4- Sealed Side Cover	13- Bearing	22- Spacer	
5- Bearing	14- Bolt	23- Bearing	
6- Hollow Output Shaft	15- Cover	24- Housing	
7- Key	16- Spacer	25- Gear	
8- Oil Plug	17- Bearing	26- Key	
9- Bolt	18- Key	27- Bearing	

3.3- HT...2.01 Types

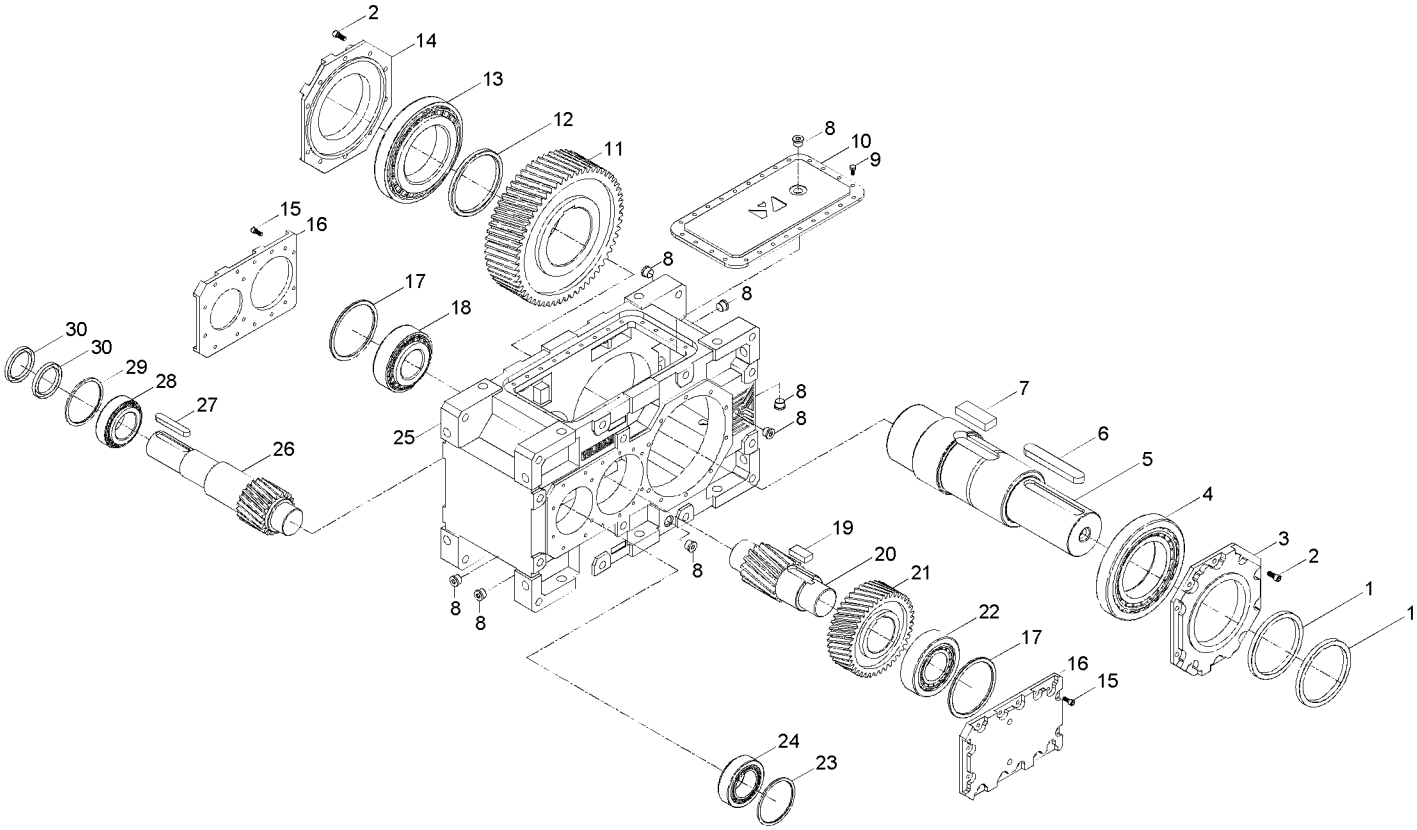

Standard HT...2.01 type basic part diagram. Parts may differ for special applications.

Standard Parts List

1- Seal	10- Top Side Cover	19- Key	28- Bearing
2- Bolt	11- Gear	20- Gear	29- Spacer
3- Sealed Side Cover	12- Spacer	21- Gear	30- Seal
4- Bearing	13- Bearing	22- Bearing	
5- Shaft	14- Cover	23- Spacer	
6- Key	15- Bolt	24- Bearing	
7- Key	16- Cover	25- Housing	
8- Oil Plug	17- Spacer	26- Gear	
9- Bolt	18- Bearing	27- Key	

3.4- HT...2.02 Types

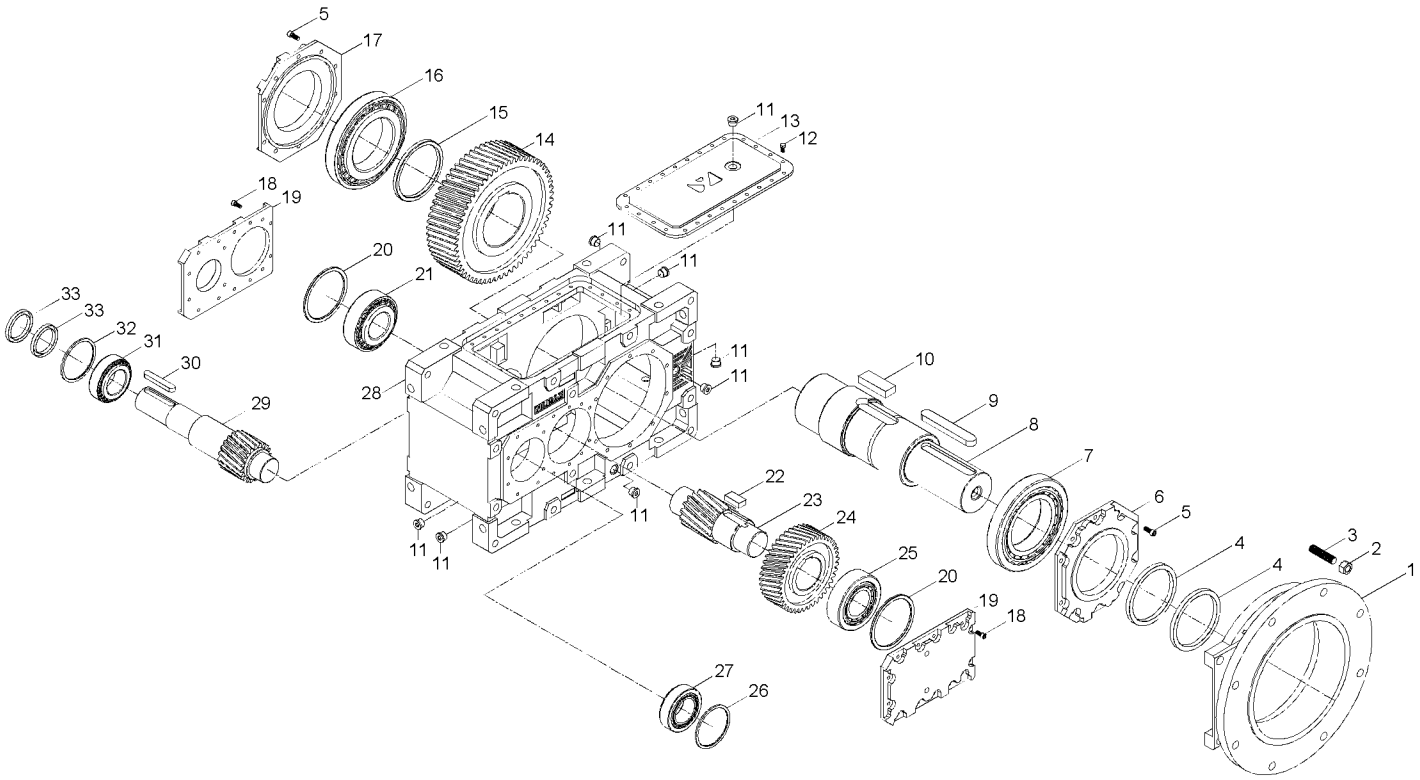

Standard HT...2.02 type basic part diagram. Parts may differ for special applications.

Standard Parts List

1- Output Flange	11- Oil Plug	21- Bearing	31- Bearing
2- Nut	12- Bolt	22- Key	32- Spacer
3- Screw Pin	13- Top Side Cover	23- Gear	33- Key
4- Seal	14- Gear	24- Gear	
5- Bolt	15- Spacer	25- Bearing	
6- Sealed Side Cover	16- Bearing	26- Spacer	
7- Bearing	17- Cover	27- Bearing	
8- Shaft	18- Bolt	28- Housing	
9- Key	19- Cover	29- Gear	
10- Key	20- Spacer	30- Key	

3.5- HT...2.03 Types

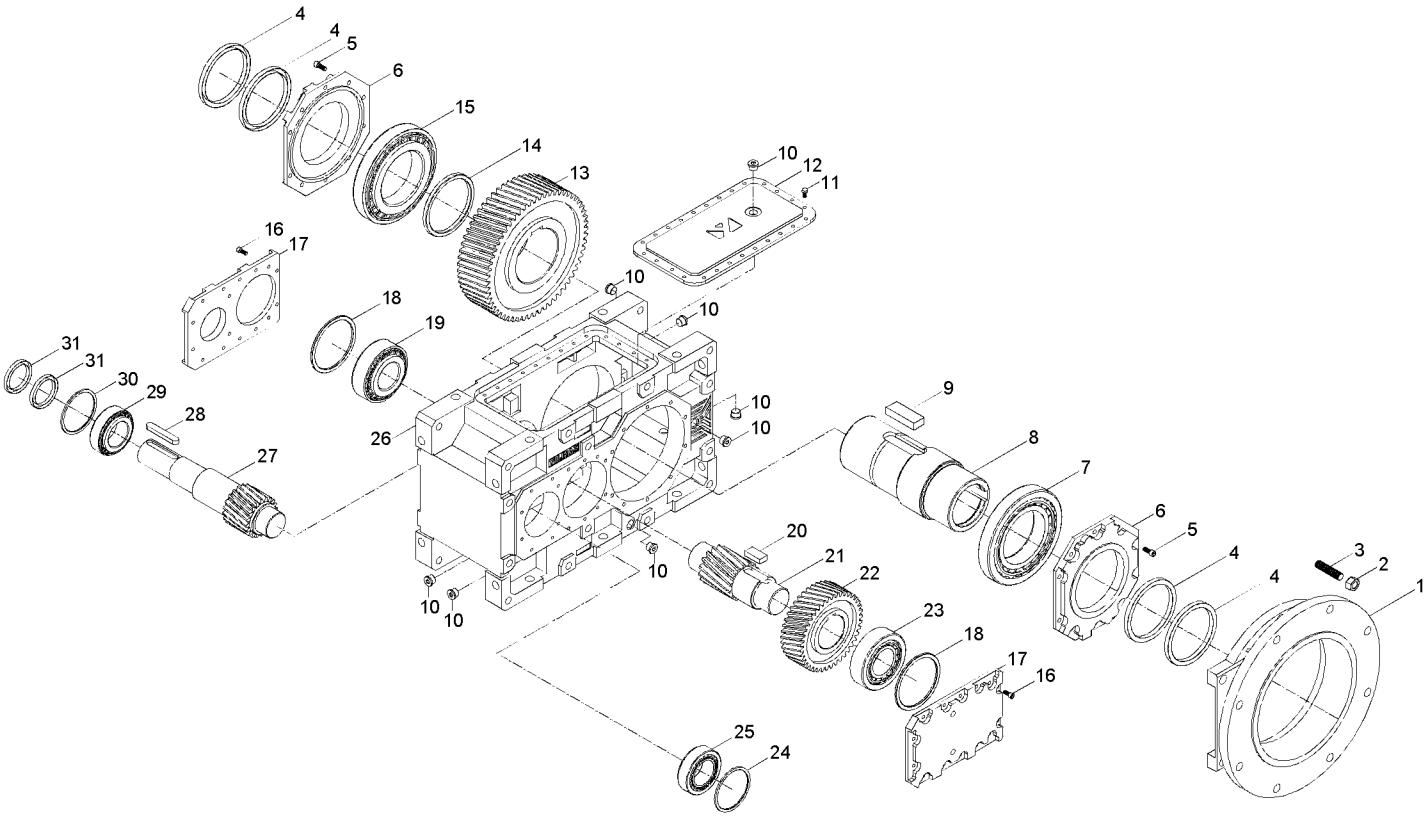

Standard HT...2.03 type basic part diagram. Parts may differ for special applications.

Standard Parts List

1- Output Flange	10- Oil Plug	19- Bearing	28- Key
2- Nut	11- Bolt	20- Key	29- Bearing
3- Screw Pin	12- Top Side Cover	21- Gear	30- Spacer
4- Seal	13- Gear	22- Gear	31- Seal
5- Bolt	14- Spacer	23- Bearing	
6- Sealed Side Cover	15- Bearing	24- Spacer	
7- Bearing	16- Bolt	25- Bearing	
8- Hollow Output Shaft	17- Cover	26- Housing	
9- Key	18- Spacer	27- Gear	

3.6- HT...2.04 Types

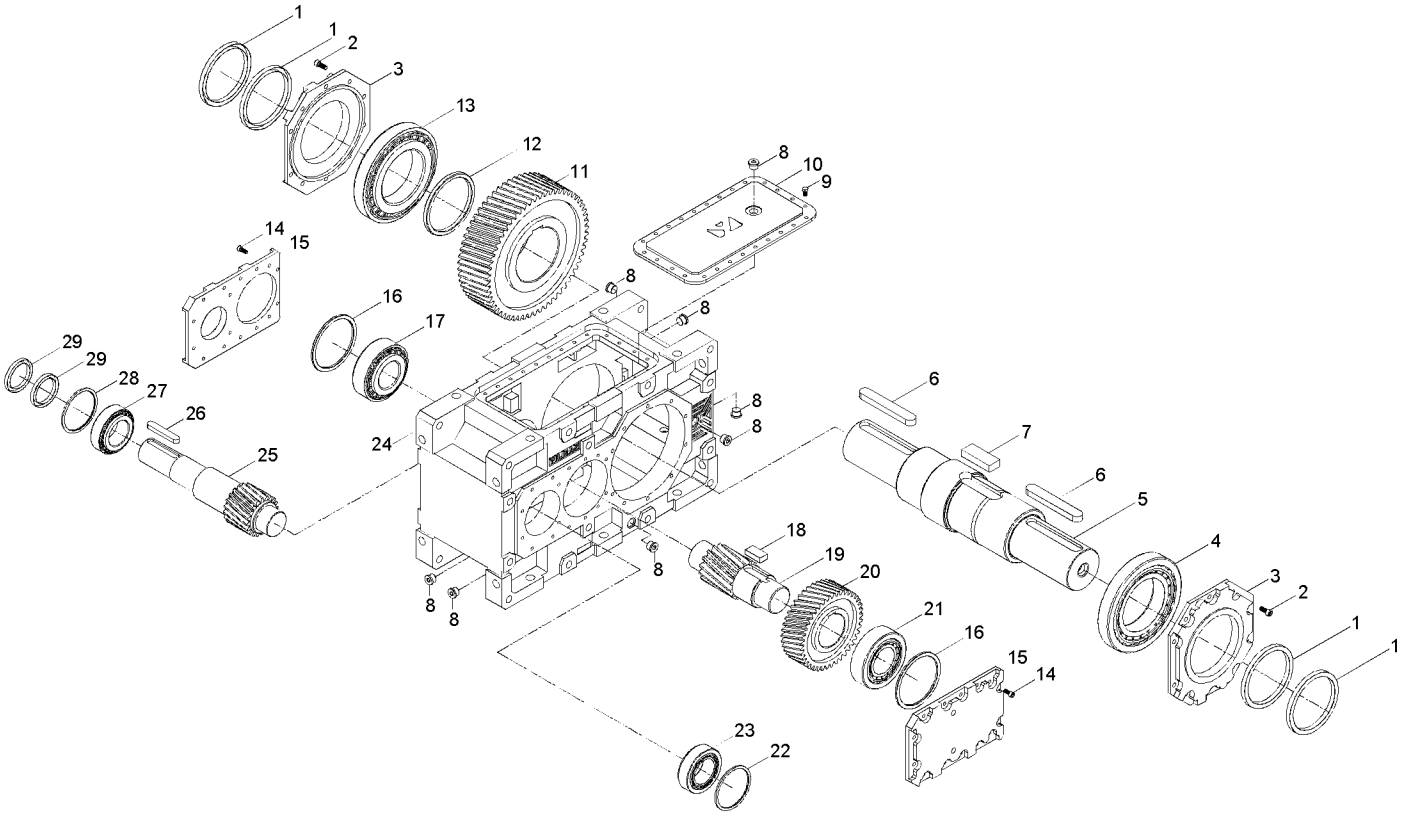

Standard HT...2.04 type basic part diagram. Parts may differ for special applications.

Standard Parts List

1- Seal	10- Top Side Cover	19- Gear	28- Spacer
2- Bolt	11- Gear	20- Gear	29- Seal
3- Sealed Side Cover	12- Spacer	21- Bearing	
4- Bearing	13- Bearing	22- Spacer	
5- Shaft	14- Bolt	23- Bearing	
6- Key	15- Cover	24- Housing	
7- Key	16- Spacer	25- Gear	
8- Oil Plug	17- Bearing	26- Key	
9- Bolt	18- Key	27- Bearing	

3.7- HT...2.05 Types

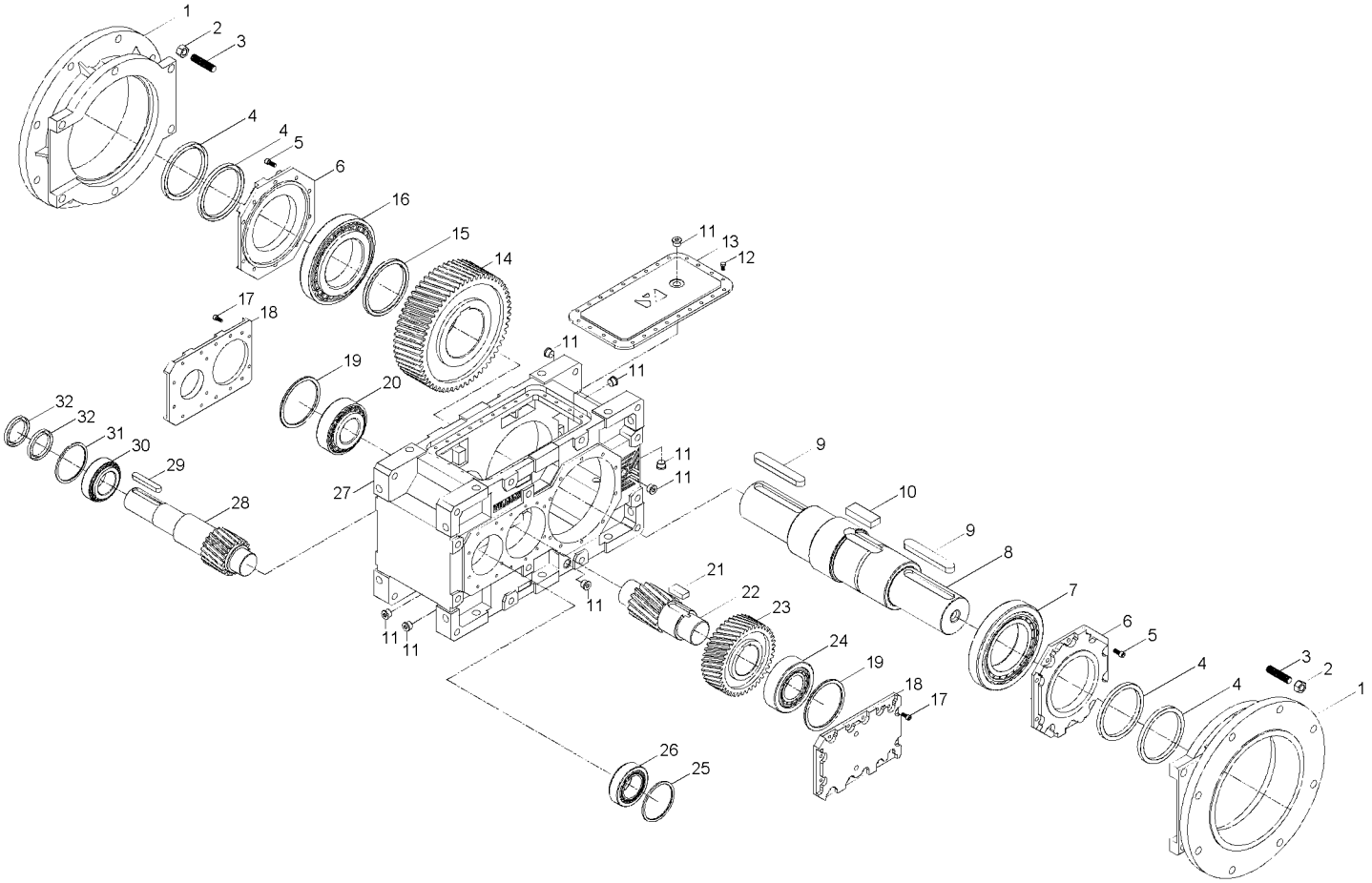

Standard HT...2.05 type basic part diagram. Parts may differ for special applications.

Standard Parts List

1- Output Flange	9- Key	17- Bolt	25- Spacer
2- Nut	10- Key	18- Cover	26- Bearing
3- Screw Pin	11- Oil Plug	19- Spacer	27- Housing
4- Seal	12- Bolt	20- Bearing	28- Gear
5- Bolt	13- Top Side Cover	21- Key	29- Key
6- Seal	14- Gear	22- Gear	30- Bearing
7- Bearing	15- Spacer	23- Gear	31- Spacer
8- Shaft	16- Bearing	24- Bearing	32- Seal

3.8- HT...2.08 Types

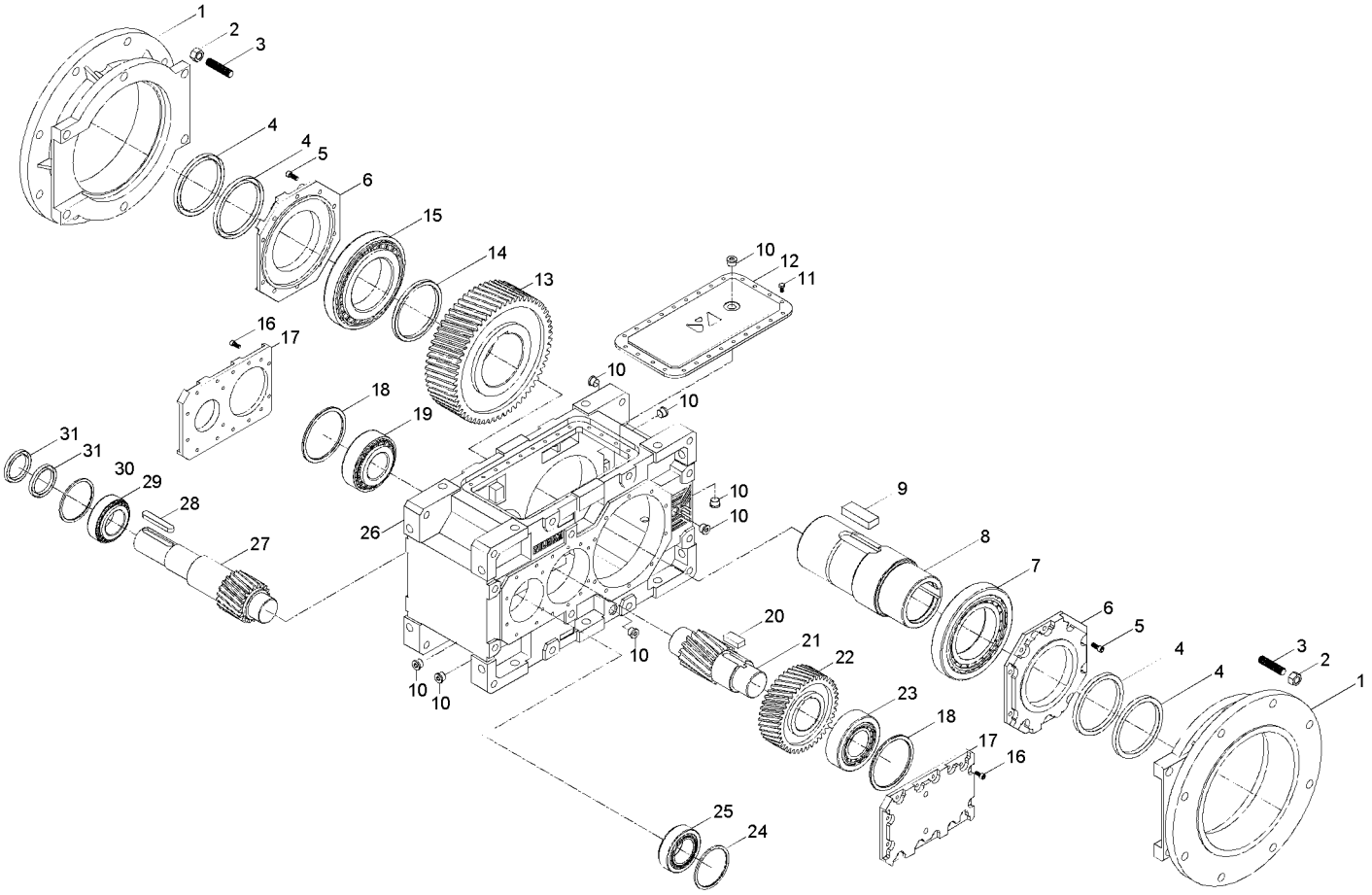

Standard HT...2.08 type basic part diagram. Parts may differ for special applications.

Standard Parts List

1- Output Flange	10- Oil Plug	19- Bearing	28- Key
2- Nut	11- Bolt	20- Key	29- Bearing
3- Screw Pin	12- Top Side Cover	21- Gear	30- Spacer
4- Seal	13- Gear	22- Gear	31- Seal
5- Bolt	14- Spacer	23- Bearing	
6- Sealed Side Cover	15- Bearing	24- Spacer	
7- Bearing	16- Bolt	25- Bearing	
8- Hollow Output Shaft	17- Cover	26- Housing	
9- Key	18- Spacer	27- Gear	

3.9- HTE..2.0E Types

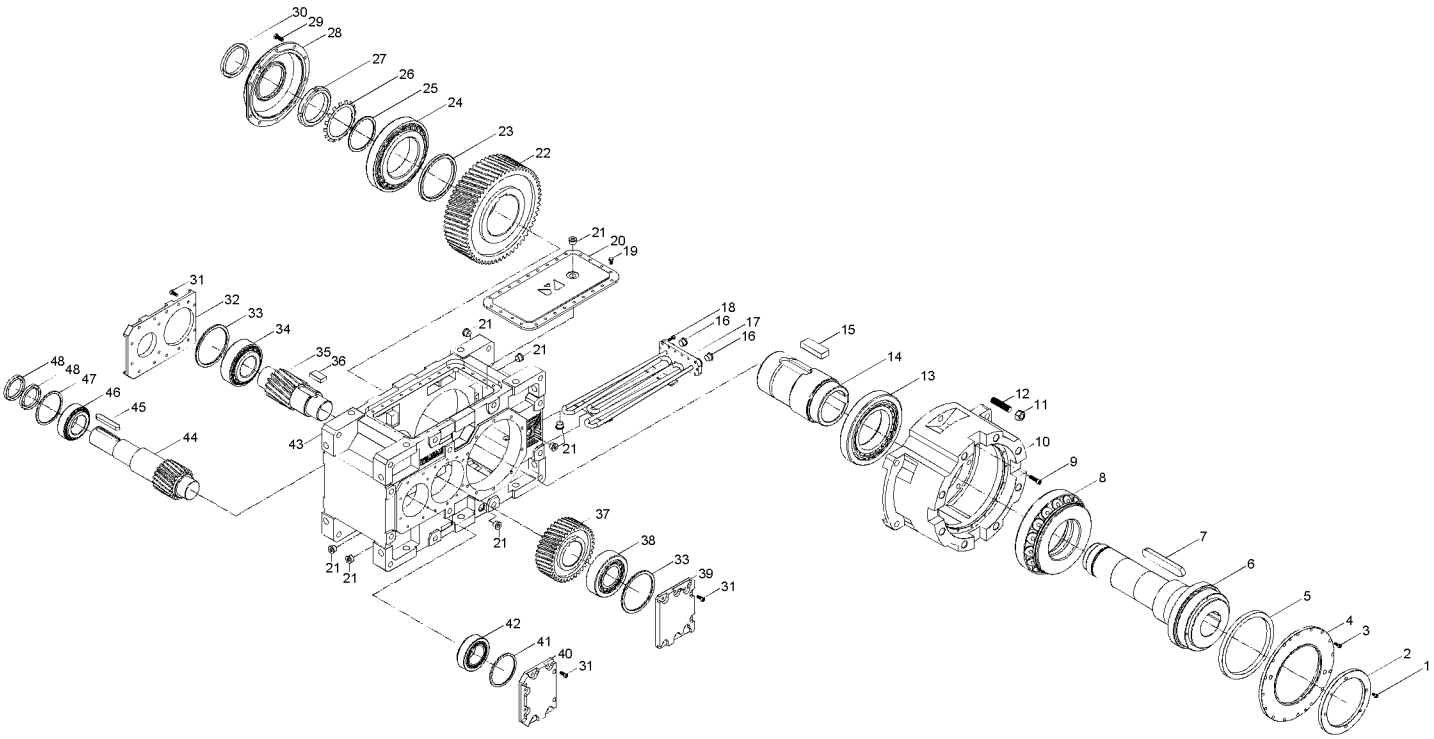

Standard HTE..2.0E type basic part diagram. Parts may differ for special applications.

Standard Parts List

1- Bolt	10- Extruder Housing	19- Bolt	28- Sealed Side Cover	37- Gear	46- Bearing
2- Cover	11- Nut	20- Top Side Cover	29- Bolt	38- Bearing	47- Spacer
3- Bolt	12- Screw Pin	21- Oil Plug	30- Seal	39- Side Cover	48- Seal
4- Seal Cover	13- Bearing	22- Gear	31- Bolt	40- Side Cover	
5- Seal	14- Hollow Output Shaft	23- Spacer	32- Cover	41- Spacer	
6- Extruder Shaft	15- Key	24- Bearing	33- Spacer	42- Bearing	
7- Key	16- Plug	25- Spacer	34- Bearing	43- Housing	
8- Axial Bearing	17- Cooling Coil	26- Locking Plate	35- Gear	44- Gear	
9- Bolt	18- Bolt	27- Locking Nut	36- Key	45- Key	

3.10- HT...3.00 Types

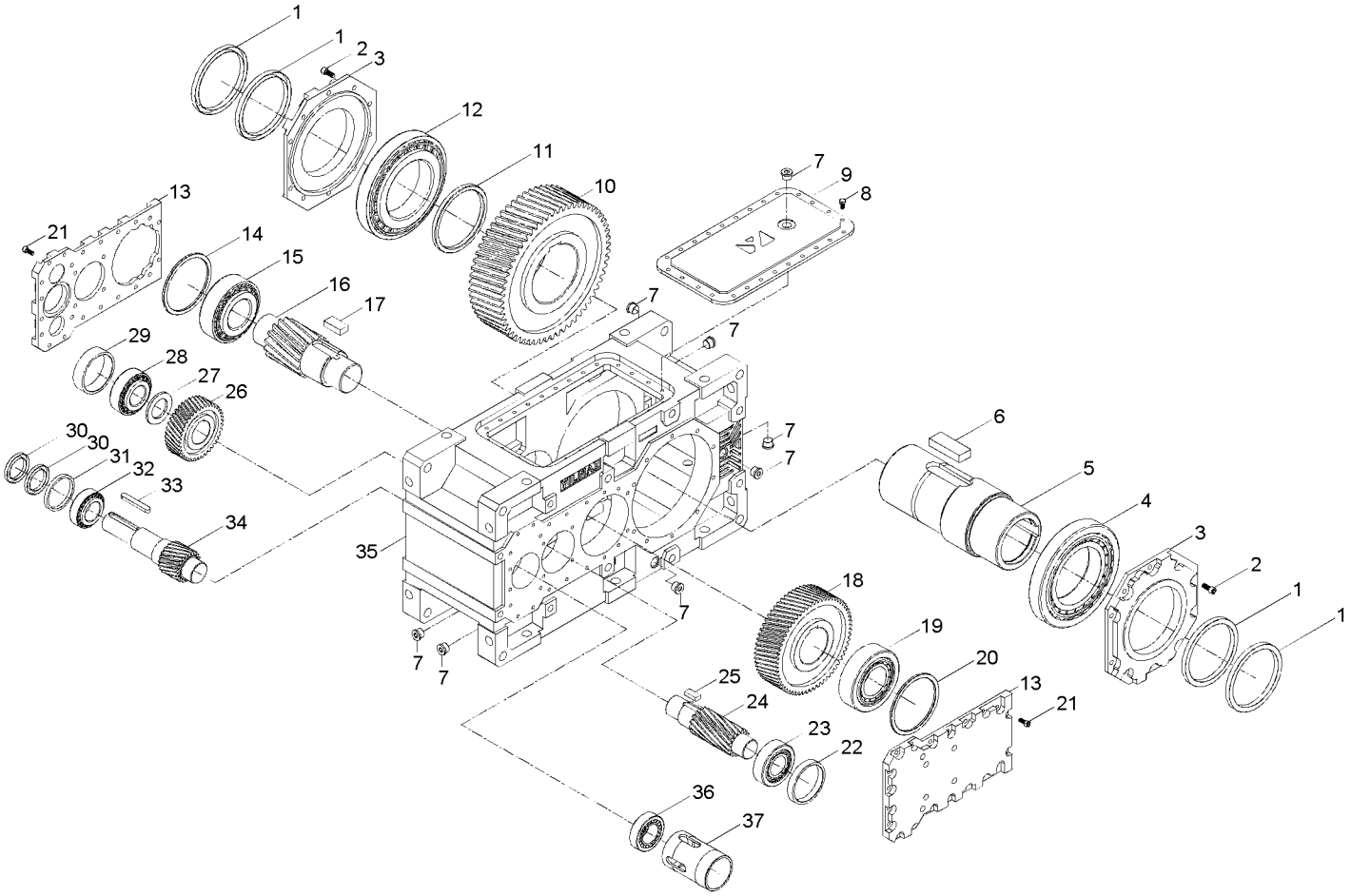

Standard HT...3.00 type basic part diagram. Parts may differ for special applications.

Standard Parts List

1- Seal	10- Gear	19- Bearing	28- Bearing	37- Tube
2- Bolt	11- Spacer	20- Spacer	29- Spacer	
3- Sealed Side Cover	12- Bearing	21- Bolt	30- Seal	
4- Bearing	13- Cover	22- Spacer	31- Spacer	
5- Hollow Output Shaft	14- Spacer	23- Bearing	32- Bearing	
6- Key	15- Bearing	24- Gear	33- Key	
7- Oil Plug	16- Gear	25- Key	34- Gear	
8- Bolt	17- Key	26- Gear	35- Housing	
9- Top Side Cover	18- Gear	27- Spacer	36- Bearing	

3.11- HT...3.0S Types

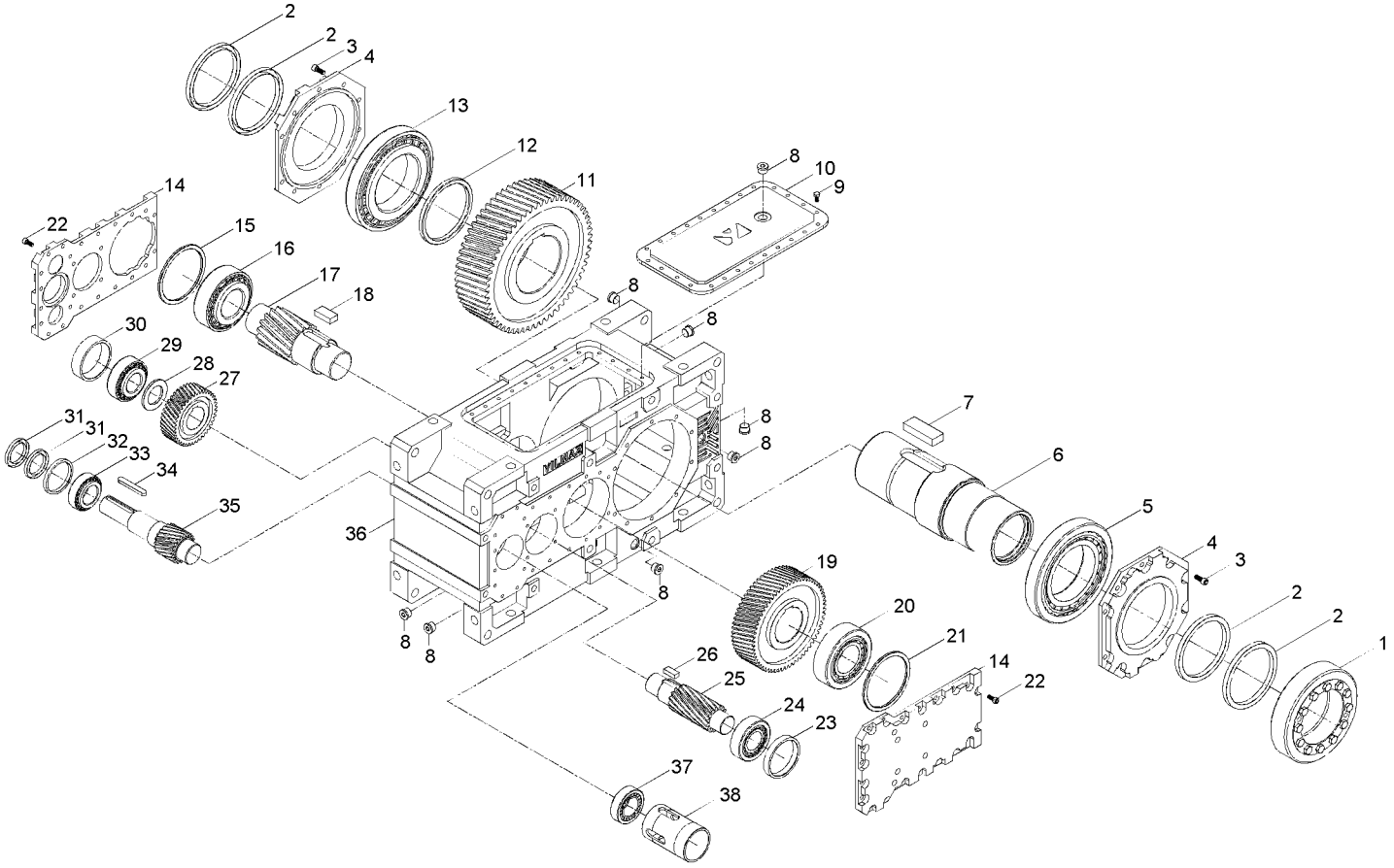

Standard HT...3.0S type basic part diagram. Parts may differ for special applications.

Standard Parts List

1- Shrink Disk	10- Top Side Cover	19- Gear	28- Spacer	37- Bearing
2- Seal	11- Gear	20- Bearing	29- Bearing	38- Tube
3- Bolt	12- Spacer	21- Spacer	30- Spacer	
4- Sealed Side Cover	13- Bearing	22- Bolt	31- Seal	
5- Bearing	14- Side Cover	23- Spacer	32- Spacer	
6- Hollow Output Shaft	15- Spacer	24- Bearing	33- Bearing	
7- Key	16- Bearing	25- Gear	34- Key	
8- Oil Plug	17- Gear	26- Key	35- Gear	
9- Bolt	18- Key	27- Gear	36- Housing	

3.12- HT...3.01 Types

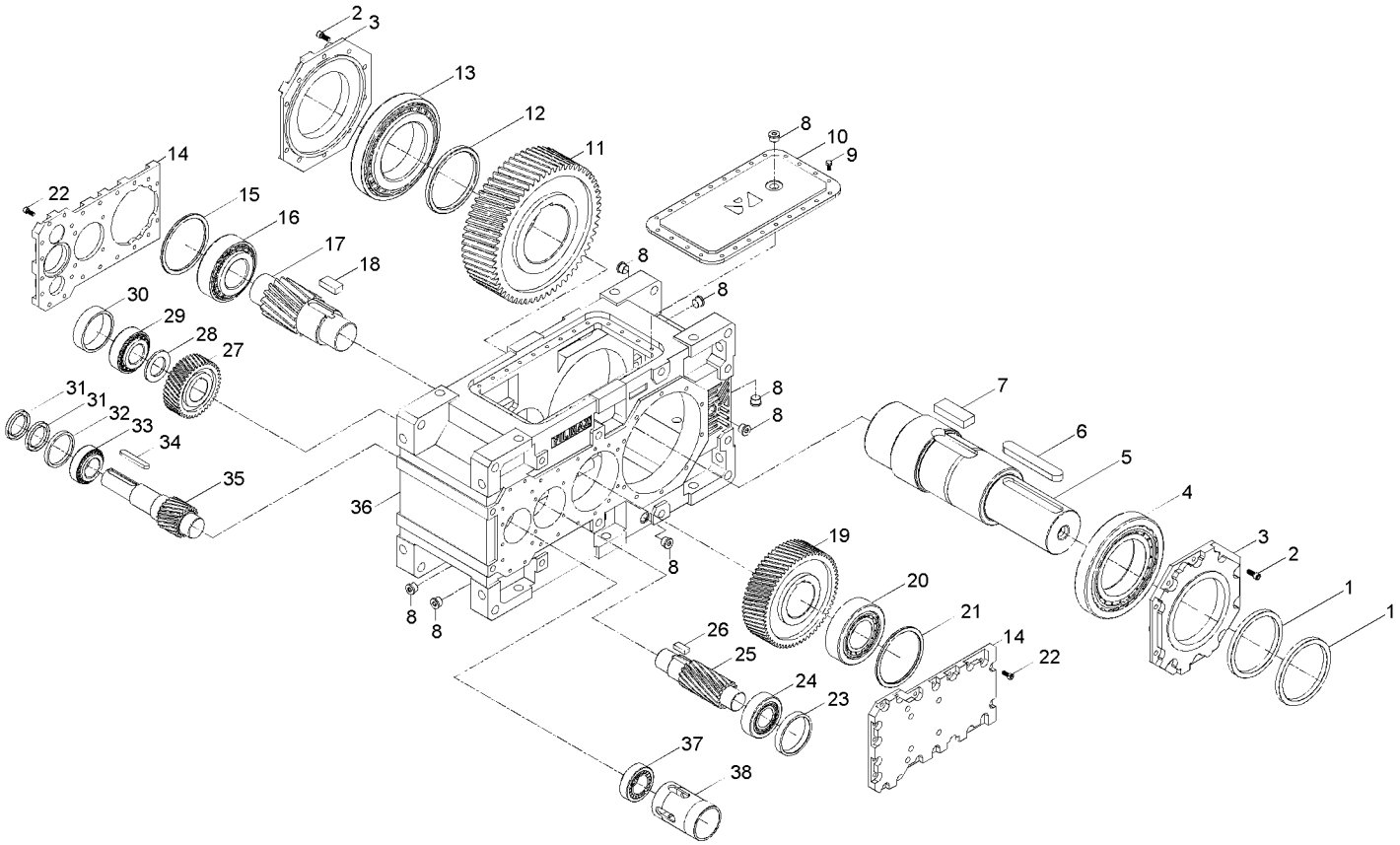

Standard HT...3.01 type basic part diagram. Parts may differ for special applications.

Standard Parts List

1- Seal	10- Top Side Cover	19- Gear	28- Spacer	37- Bearing
2- Bolt	11- Gear	20- Bearing	29- Bearing	38- Tube
3- Sealed Side Cover	12- Spacer	21- Spacer	30- Spacer	
4- Bearing	13- Bearing	22- Bolt	31- Seal	
5- Shaft	14- Side Cover	23- Spacer	32- Spacer	
6- Key	15- Spacer	24- Bearing	33- Bearing	
7- Key	16- Bearing	25- Gear	34- Key	
8- Oil Plug	17- Gear	26- Key	35- Gear	
9- Bolt	18- Key	27- Gear	36- Housing	

3.13- HT...3.02 Types

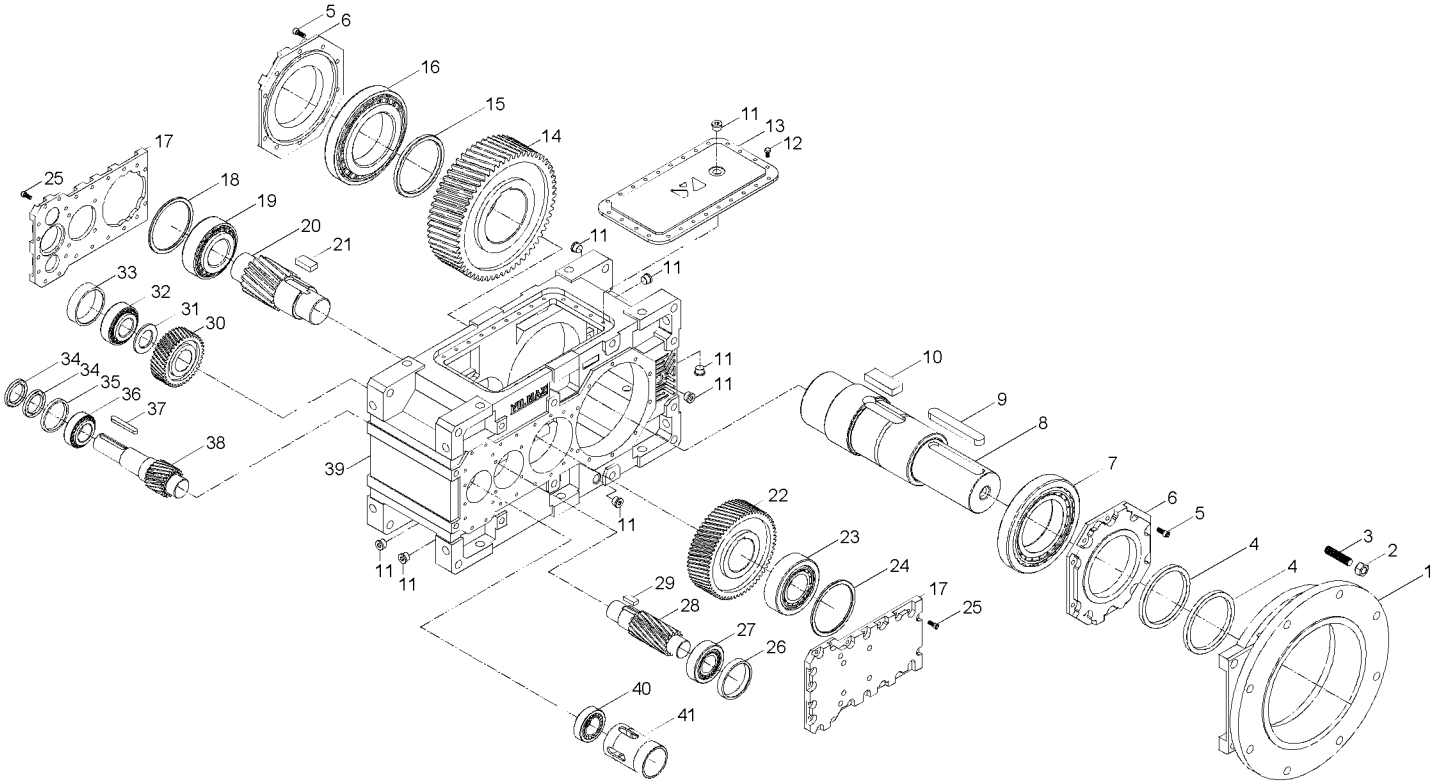

Standard HT...3.02 type basic part diagram. Parts may differ for special applications.

Standard Parts List

1- Flange	10- Key	19- Bearing	28- Gear	37- Key
2- Nut	11- Oil Plug	20- Gear	29- Key	38- Gear
3- Screw Pin	12- Bolt	21- Key	30- Gear	39- Housing
4- Seal	13- Top Side Cover	22- Gear	31- Spacer	40- Bearing
5- Bolt	14- Gear	23- Bearing	32- Bearing	41- Tube
6- Sealed Side Cover	15- Spacer	24- Spacer	33- Spacer	
7- Bearing	16- Bearing	25- Bolt	34- Seal	
8- Shaft	17- Side Cover	26- Spacer	35- Spacer	
9- Key	18- Spacer	27- Bearing	36- Bearing	

3.14- HT...3.03 Types

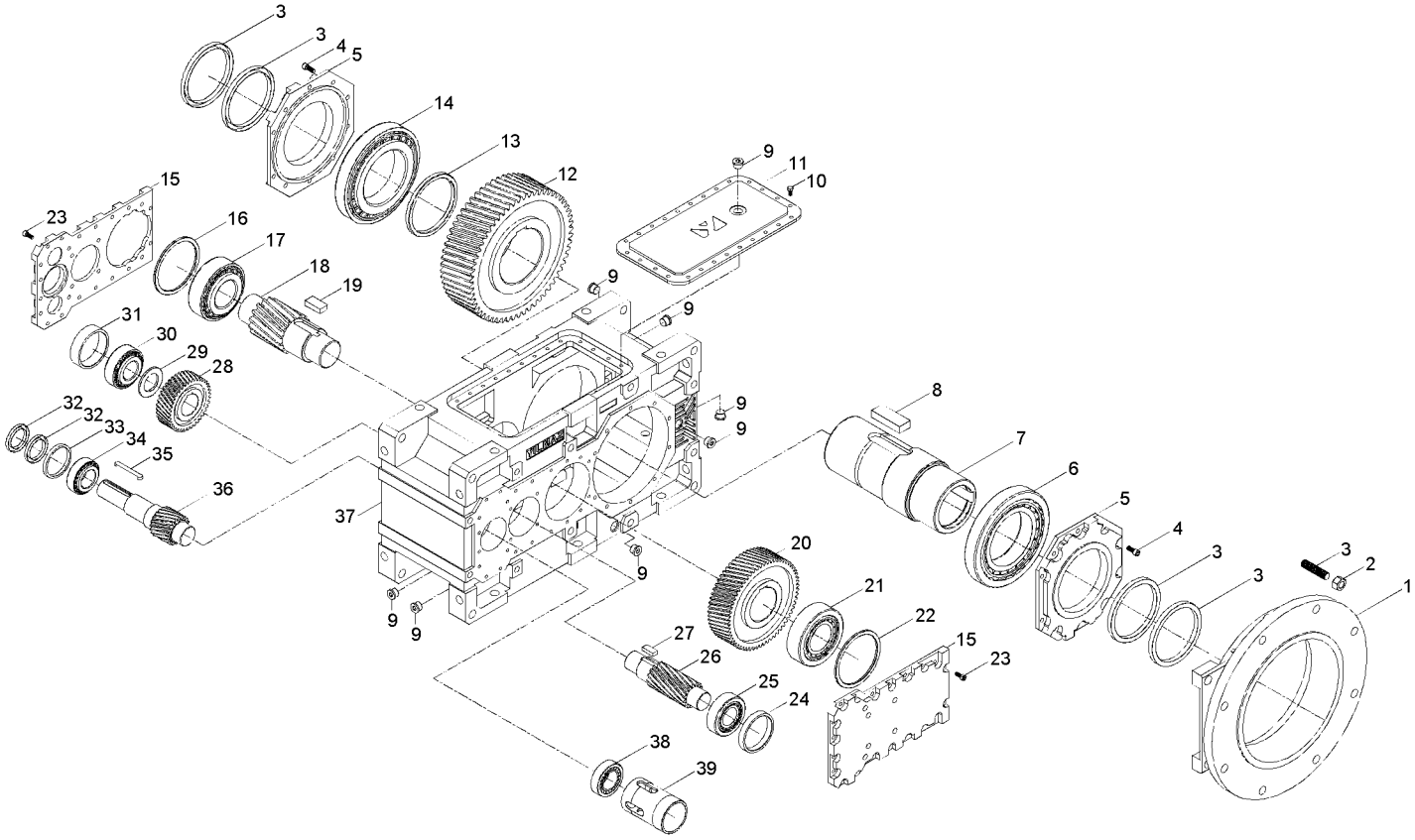

Standard HT...3.03 type basic part diagram. Parts may differ for special applications.

Standard Parts List

1- Flange	10- Bolt	19- Key	28- Gear	37- Housing
2- Nut	11- Top Side Cover	20- Gear	29- Spacer	38- Bearing
3- Seal	12- Gear	21- Bearing	30- Bearing	39- Tube
4- Bolt	13- Spacer	22- Spacer	31- Spacer	
5- Sealed Side Cover	14- Bearing	23- Bolt	32- Seal	
6- Bearing	15- Side Cover	24- Spacer	33- Spacer	
7- Hollow Output Shaft	16- Spacer	25- Bearing	34- Bearing	
8- Key	17- Bearing	26- Gear	35- Key	
9- Oil Plug	18- Gear	27- Key	36- Gear	

3.15- HT...3.04 Types

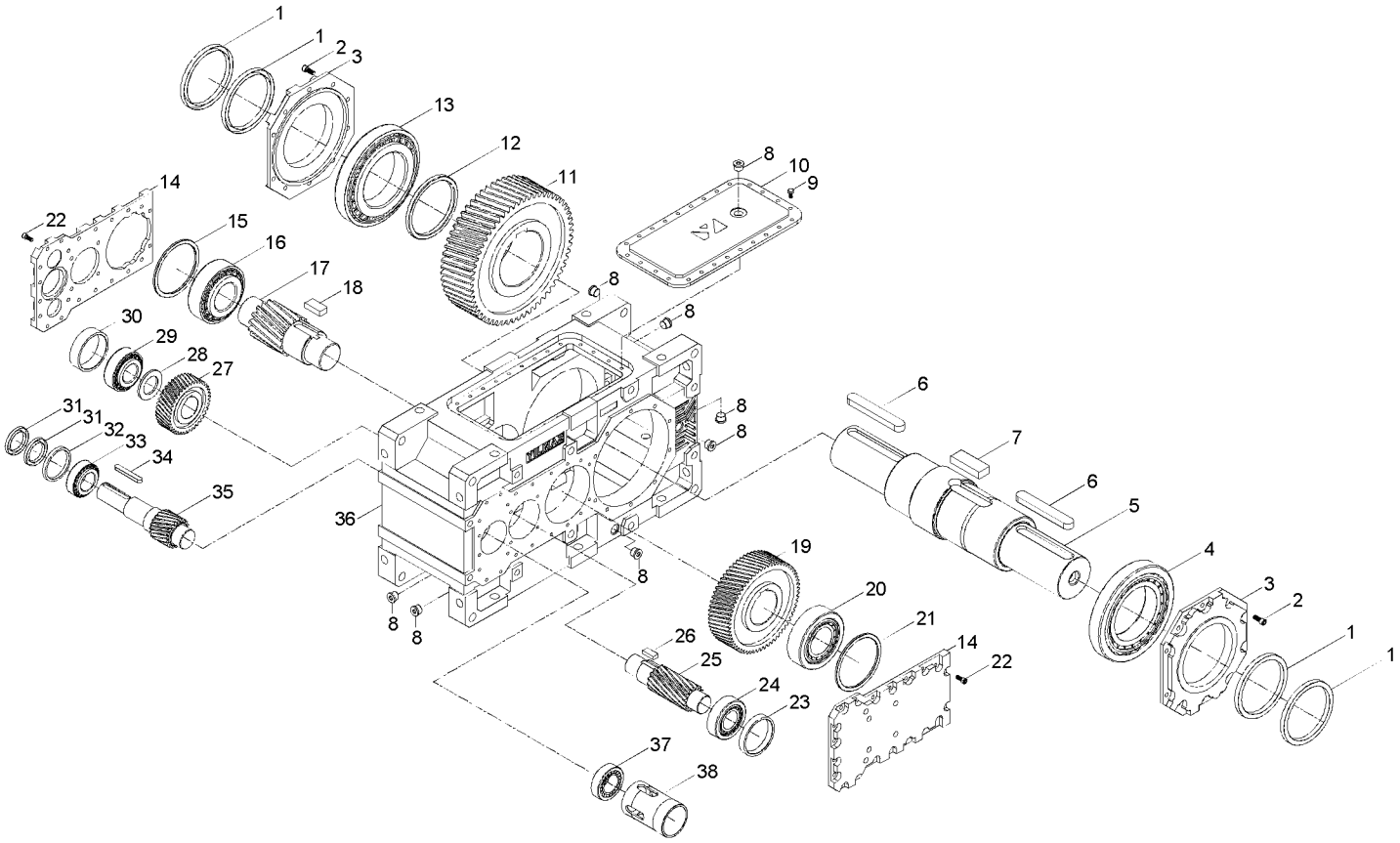

Standard HT...3.04 type basic part diagram. Parts may differ for special applications.

Standard Parts List

1- Seal	10- Top Side Cover	19- Gear	28- Spacer	37- Bearing
2- Bolt	11- Gear	20- Bearing	29- Bearing	38- Tube
3- Sealed Side Cover	12- Spacer	21- Spacer	30- Spacer	
4- Bearing	13- Bearing	22- Bolt	31- Seal	
5- Shaft	14- Side Cover	23- Spacer	32- Spacer	
6- Key	15- Spacer	24- Bearing	33- Bearing	
7- Key	16- Bearing	25- Gear	34- Key	
8- Oil Plug	17- Gear	26- Key	35- Gear	
9- Bolt	18- Key	27- Gear	36- Housing	

3.16- HT...3.05 Types

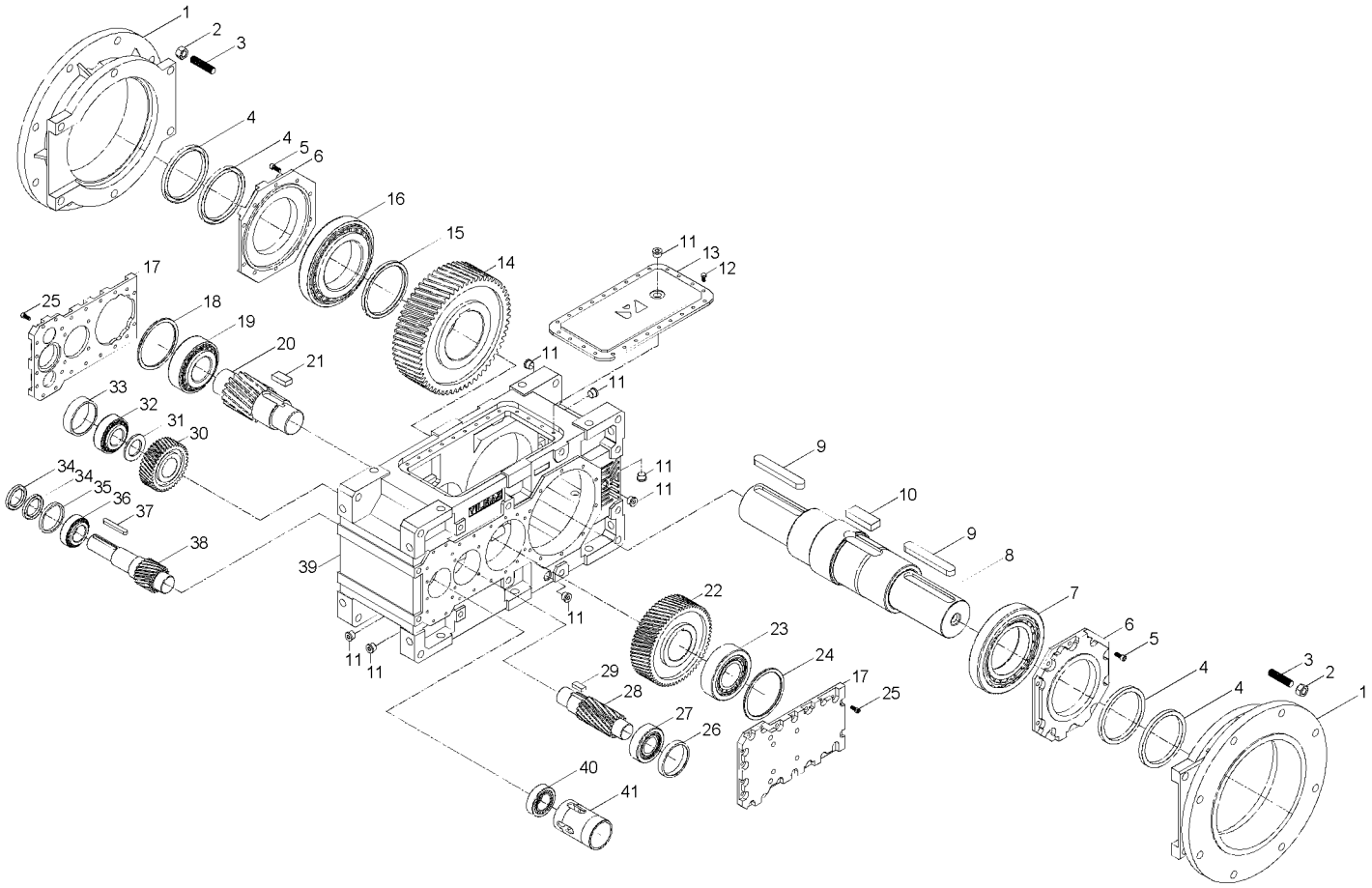

Standard HT...3.05 type basic part diagram. Parts may differ for special applications.

Standard Parts List

1- Flange	10- Key	19- Bearing	28- Gear	37- Key
2- Nut	11- Oil Plug	20- Gear	29- Key	38- Gear
3- Screw Pin	12- Bolt	21- Key	30- Gear	39- Housing
4- Seal	13- Top Side Cover	22- Gear	31- Spacer	40- Bearing
5- Bolt	14- Gear	23- Bearing	32- Bearing	41- Tube
6- Sealed Side Cover	15- Spacer	24- Spacer	33- Spacer	
7- Bearing	16- Bearing	25- Bolt	34- Seal	
8- Shaft	17- Side Cover	26- Spacer	35- Spacer	
9- Key	18- Spacer	27- Bearing	36- Bearing	

3.17- HT...3.08 Types

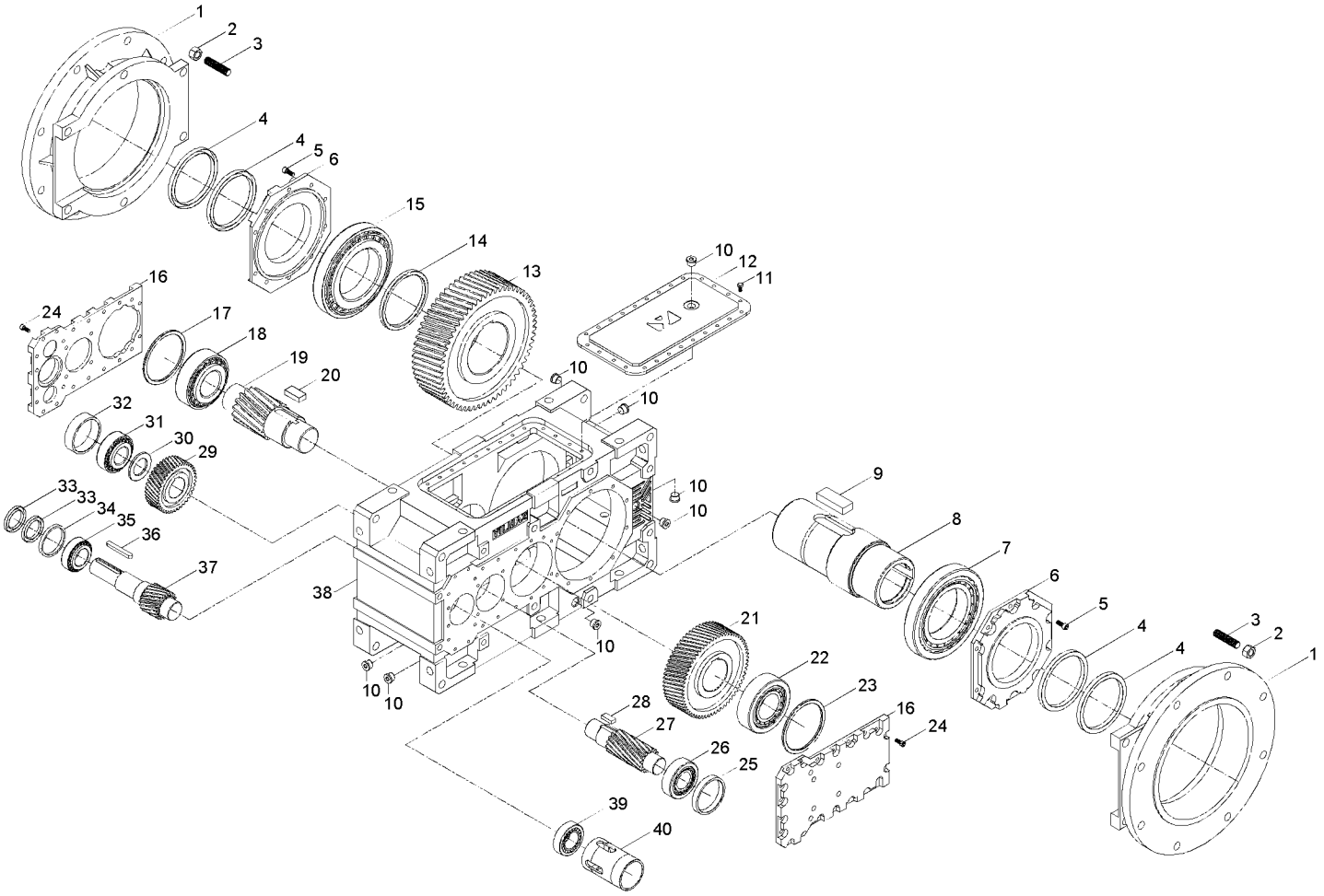

Standard HT...3.08 type basic part diagram. Parts may differ for special applications.

Standard Parts List

1- Flange	10- Oil Plug	19- Gear	28- Key	37- Gear
2- Nut	11- Bolt	20- Key	29- Gear	38- Housing
3- Screw Pin	12- Top Side Cover	21- Gear	30- Spacer	39- Bearing
4- Seal	13- Gear	22- Bearing	31- Bearing	40- Tube
5- Bolt	14- Spacer	23- Spacer	32- Spacer	
6- Sealed Side Cover	15- Bearing	24- Bolt	33- Seal	
7- Bearing	16- Side Cover	25- Spacer	34- Spacer	
8- Hollow Output Shaft	17- Spacer	26- Bearing	35- Bearing	
9- Key	18- Bearing	27- Gear	36- Key	

3.18- HTE..3.0E Types

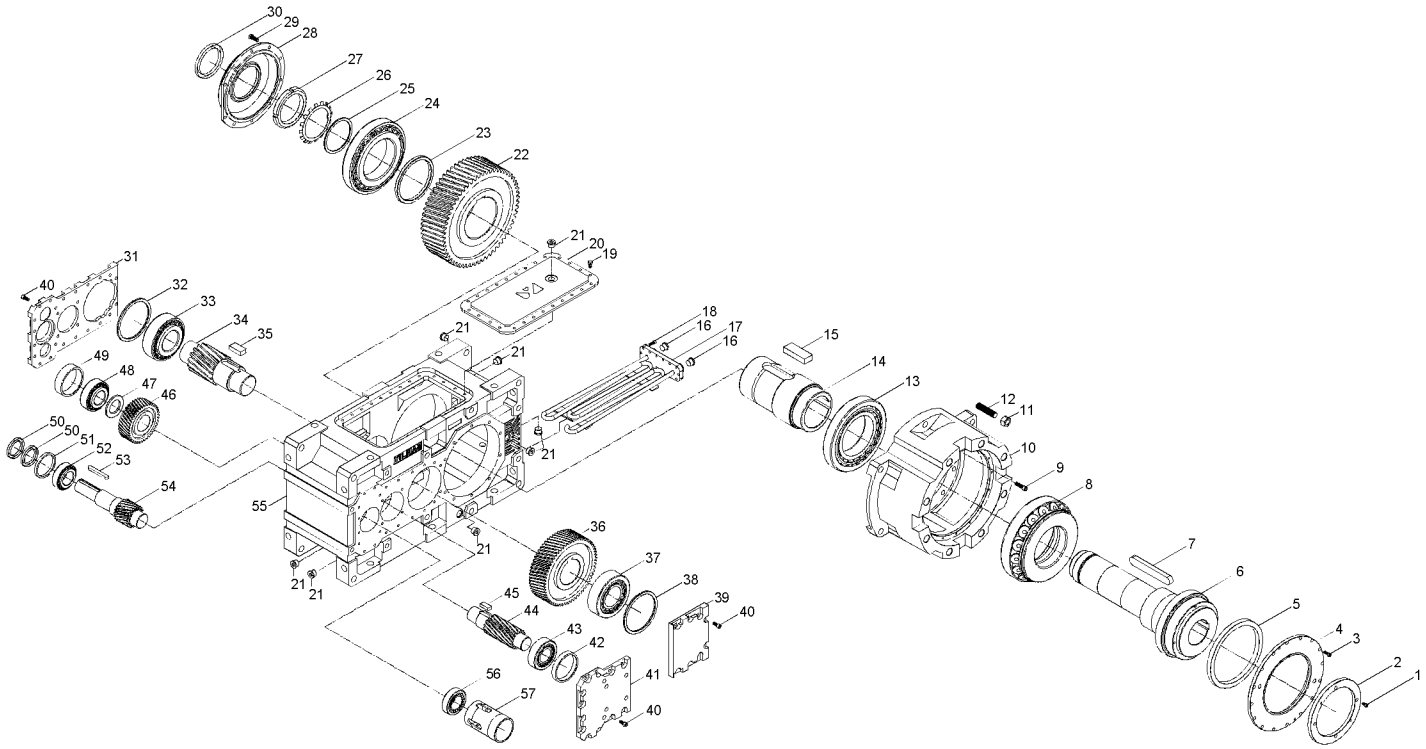

Standard HTE..3.0E type basic part diagram. Parts may differ for special applications.

Standard Parts List

1- Bolt	11- Nut	21- Oil Plug	31- Side Cover	41- Side Cover	51- Spacer
2- Cover	12- Screw Pin	22- Gear	32- Spacer	42- Spacer	52- Bearing
3- Bolt	13- Bearing	23- Spacer	33- Bearing	43- Bearing	53- Key
4- Seal Cover	14- Hollow Output Shaft	24- Bearing	34- Gear	44- Gear	54- Gear
5- Seal	15- Key	25- Spacer	35- Key	45- Key	55- Housing
6- Extruder Shaft	16- Plug	26- Locking Plate	36- Gear	46- Gear	56- Bearing
7- Key	17- Cooling Coil	27- Locking Nut	37- Bearing	47- Spacer	57- Tube
8- Axial Bearing	18- Bolt	28- Seal Cover	38- Spacer	48- Bearing	
9- Bolt	19- Bolt	29- Bolt	39- Side Cover	49- Spacer	
10- Extruder Housing	20- Top Side Cover	30- Seal	40- Bolt	50- Seal	

3.19- HT...4.00 Types

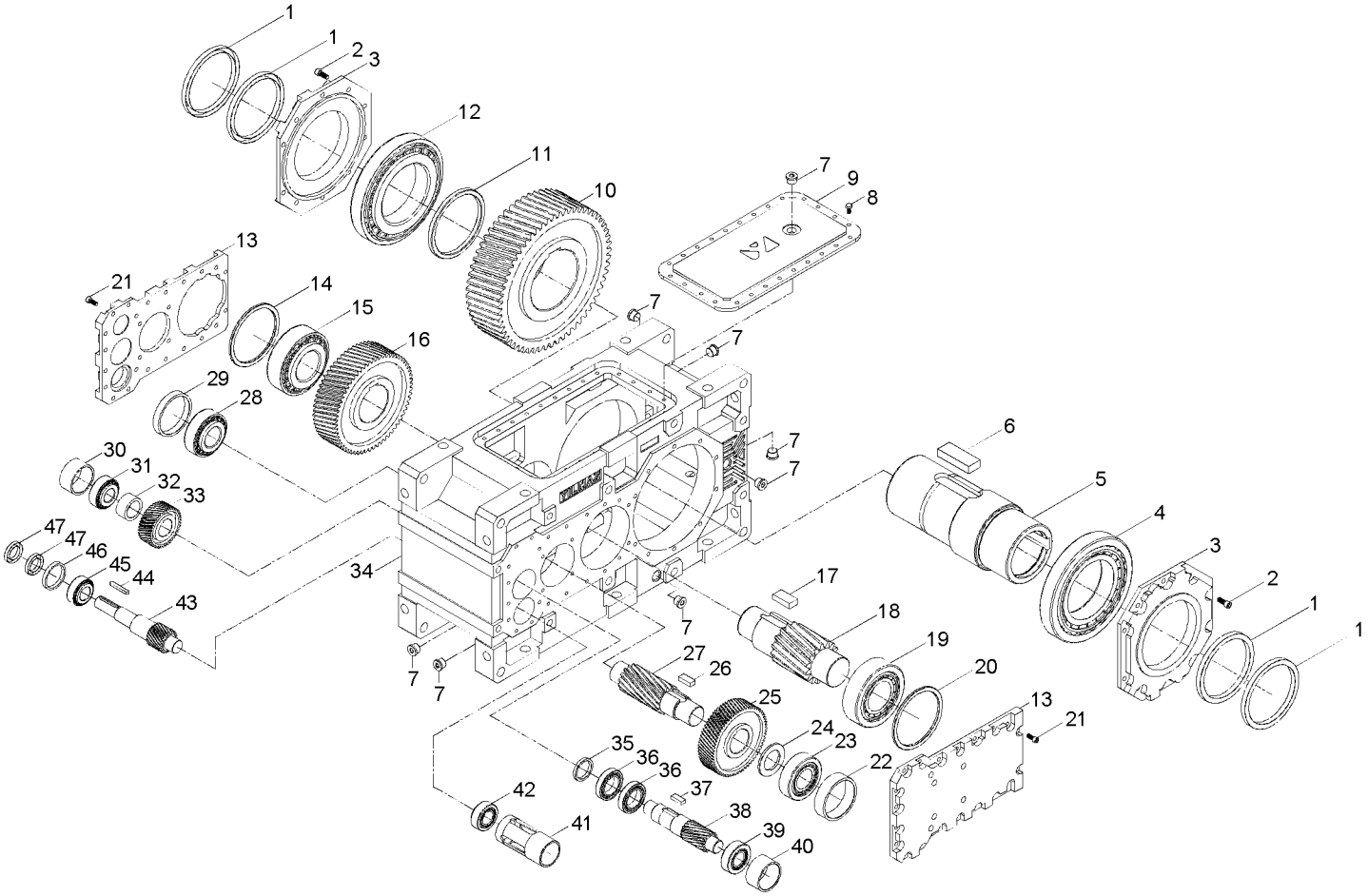

Standard HT...4.00 type basic part diagram. Parts may differ for special applications.

Standard Parts List

1- Seal	10- Gear	19- Bearing	28- Bearing	37- Key	46- Spacer
2- Bolt	11- Spacer	20- Spacer	29- Spacer	38- Gear	47- Seal
3- Sealed Side Cover	12- Bearing	21- Bolt	30- Spacer	39- Bearing	
4- Bearing	13- Side Cover	22- Spacer	31- Bearing	40- Spacer	
5- Hollow Output Shaft	14- Spacer	23- Bearing	32- Spacer	41- Tube	
6- Key	15- Bearing	24- Spacer	33- Gear	42- Bearing	
7- Oil Plug	16- Gear	25- Gear	34- Housing	43- Gear	
8- Bolt	17- Key	26- Key	35- Spacer	44- Key	
9- Top Side Cover	18- Gear	27- Gear	36- Bearing	45- Bearing	

3.20- HT...4.0S Types

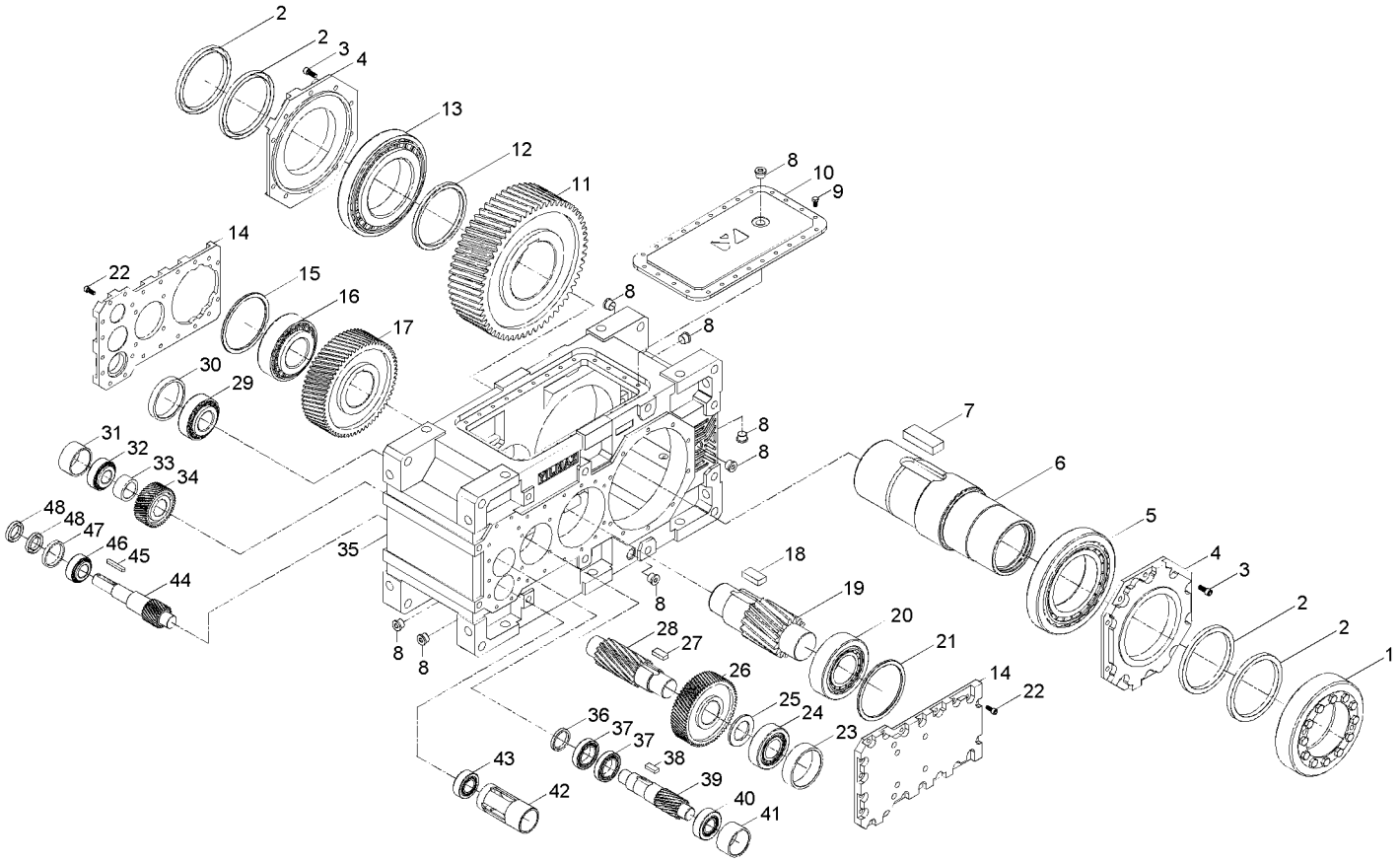

Standard HT...4.0S type basic part diagram. Parts may differ for special applications.

Standard Parts List

1- Shrink Disk	10- Top Side Cover	19- Gear	28- Gear	37- Bearing	46- Bearing
2- Seal	11- Gear	20- Bearing	29- Bearing	38- Key	47- Spacer
3- Bolt	12- Spacer	21- Spacer	30- Spacer	39- Gear	48- Seal
4- Seal Cover	13- Bearing	22- Bolt	31- Spacer	40- Bearing	
5- Bearing	14- Side Cover	23- Spacer	32- Bearing	41- Spacer	
6- Hollow Output Shaft	15- Spacer	24- Bearing	33- Spacer	42- Tube	
7- Key	16- Bearing	25- Spacer	34- Gear	43- Bearing	
8- Oil Plug	17- Gear	26- Gear	35- Housing	44- Gear	
9- Bolt	18- Key	27- Key	36- Spacer	45- Key	

3.21- HT...4.01 Types

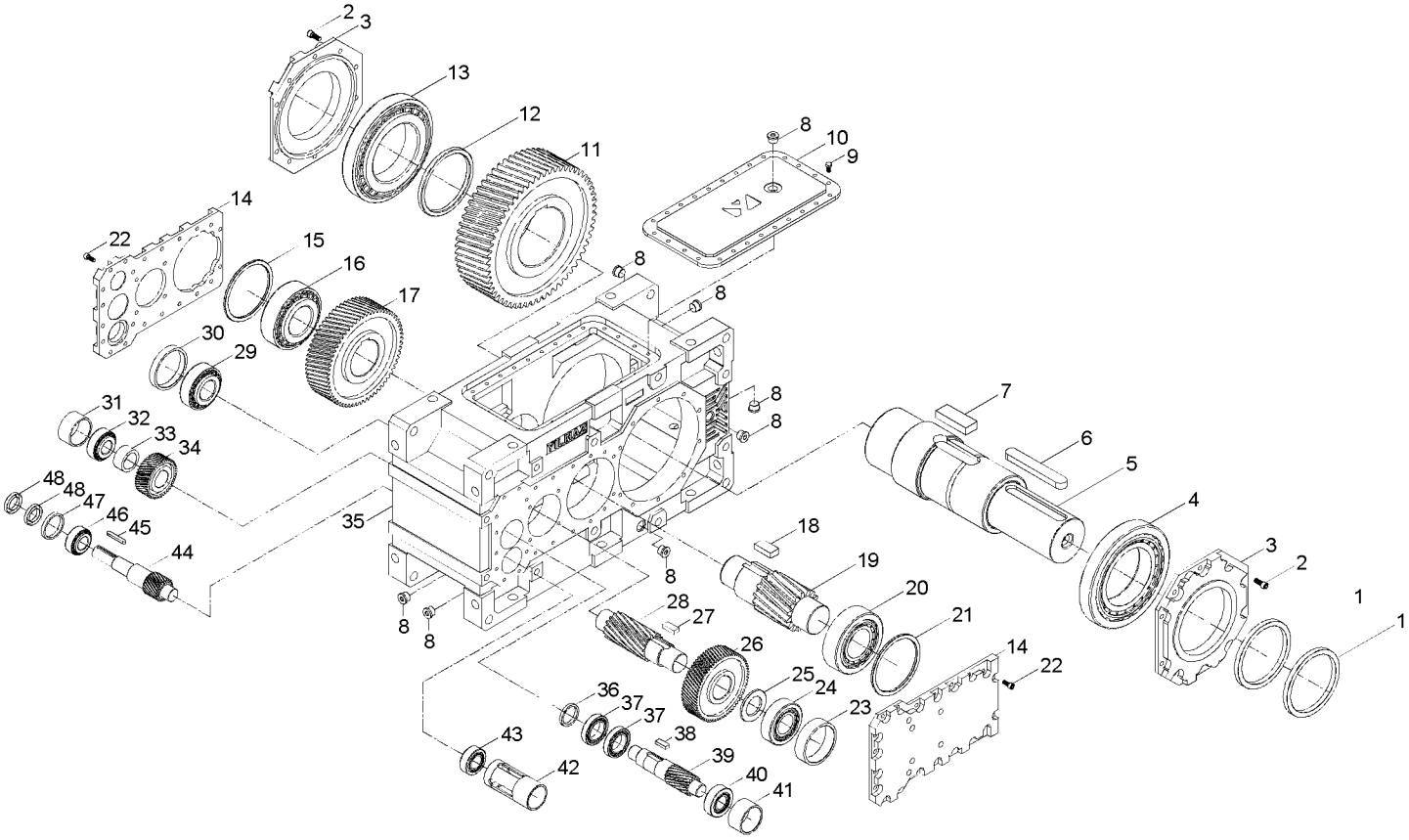

Standard HT...4.01 type basic part diagram. Parts may differ for special applications.

Standard Parts List

1- Seal	10- Top Side Cover	19- Gear	28- Gear	37- Bearing	46- Bearing
2- Bolt	11- Gear	20- Bearing	29- Bearing	38- Key	47- Spacer
3- Seal Cover	12- Spacer	21- Spacer	30- Spacer	39- Gear	48- Seal
4- Bearing	13- Bearing	22- Bolt	31- Spacer	40- Bearing	
5- Shaft	14- Side Cover	23- Spacer	32- Bearing	41- Spacer	
6- Key	15- Spacer	24- Bearing	33- Spacer	42- Tube	
7- Key	16- Bearing	25- Spacer	34- Gear	43- Bearing	
8- Oil Plug	17- Gear	26- Gear	35- Housing	44- Gear	
9- Bolt	18- Key	27- Key	36- Spacer	45- Key	

3.22- HT...4.02 Types

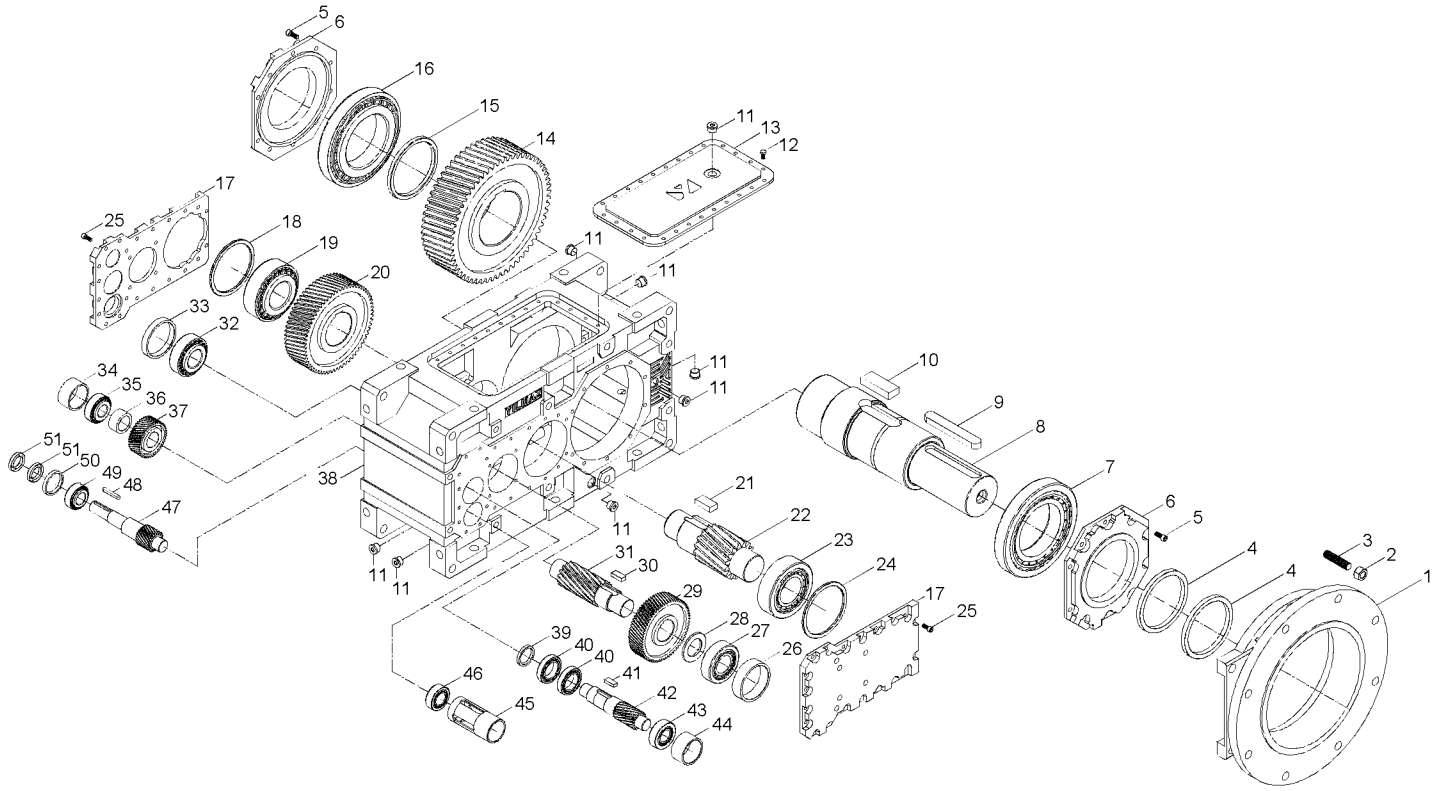

Standard HT...4.02 type basic part diagram. Parts may differ for special applications.

Standard Parts List

1- Flange	10- Key	19- Bearing	28- Spacer	37- Gear	46- Bearing
2- Nut	11- Oil Plug	20- Gear	29- Gear	38- Housing	47- Gear
3- Screw Pin	12- Bolt	21- Key	30- Key	39- Spacer	48- Key
4- Seal	13- Top Side Cover	22- Gear	31- Gear	40- Bearing	49- Bearing
5- Bolt	14- Gear	23- Bearing	32- Bearing	41- Key	50- Spacer
6- Seal Cover	15- Spacer	24- Spacer	33- Spacer	42- Gear	51- Key
7- Bearing	16- Bearing	25- Bolt	34- Spacer	43- Bearing	
8- Shaft	17- Side Cover	26- Spacer	35- Bearing	44- Spacer	
9- Key	18- Spacer	27- Bearing	36- Spacer	45- Tube	

3.23- HT...4.03 Types

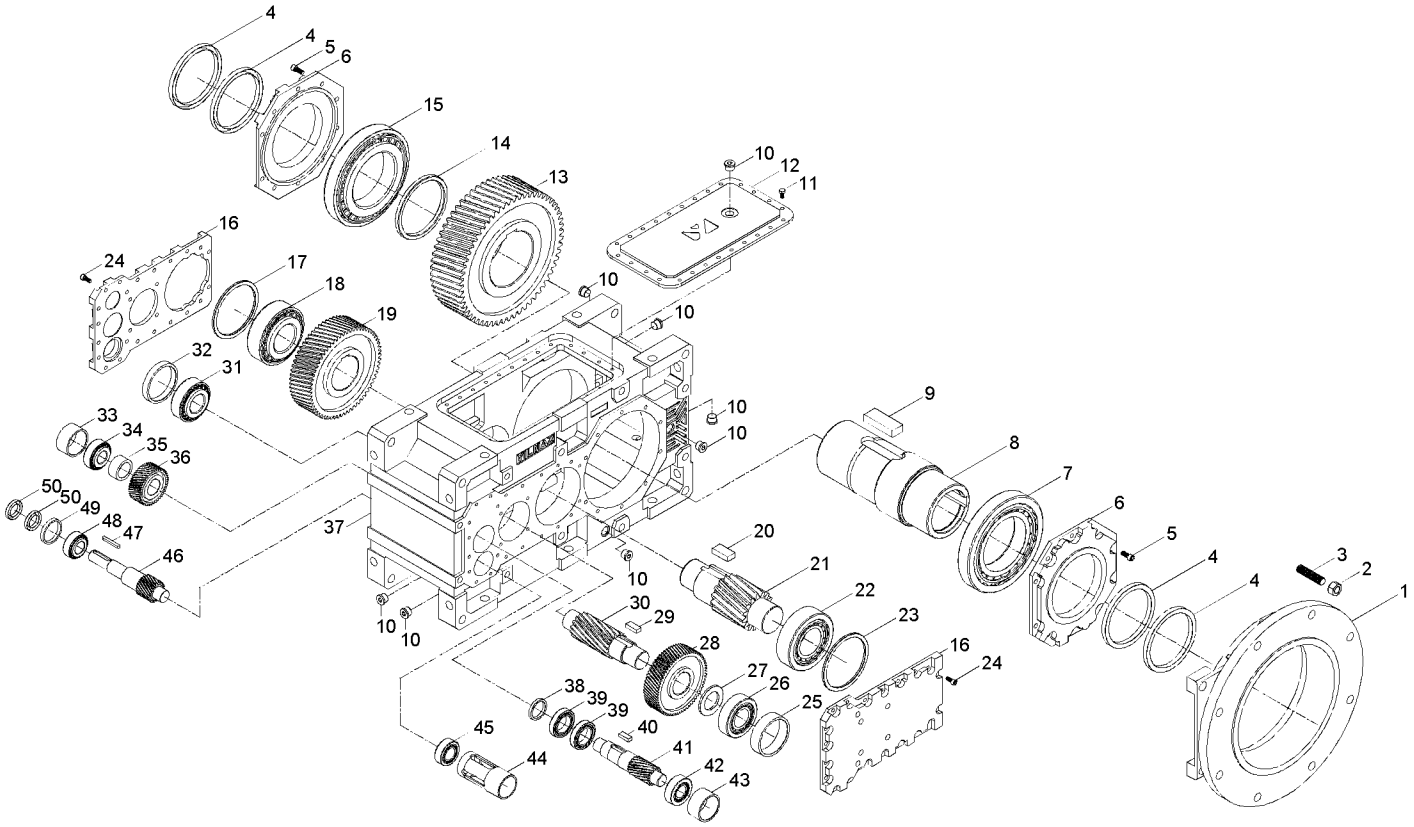

Standard HT...4.03 type basic part diagram. Parts may differ for special applications.

Standard Parts List

1- Flange	10- Oil Plug	19- Gear	28- Gear	37- Housing	46- Gear
2- Nut	11- Bolt	20- Key	29- Key	38- Spacer	47- Key
3- Screw Pin	12- Top Side Cover	21- Gear	30- Gear	39- Bearing	48- Bearing
4- Seal	13- Gear	22- Bearing	31- Bearing	40- Key	49- Spacer
5- Bolt	14- Spacer	23- Spacer	32- Spacer	41- Gear	50- Seal
6- Seal Cover	15- Bearing	24- Bolt	33- Spacer	42- Bearing	
7- Bearing	16- Side Cover	25- Spacer	34- Bearing	43- Spacer	
8- Hollow Output Shaft	17- Spacer	26- Bearing	35- Spacer	44- Tube	
9- Key	18- Bearing	27- Spacer	36- Gear	45- Bearing	

3.24- HT...4.04 Types

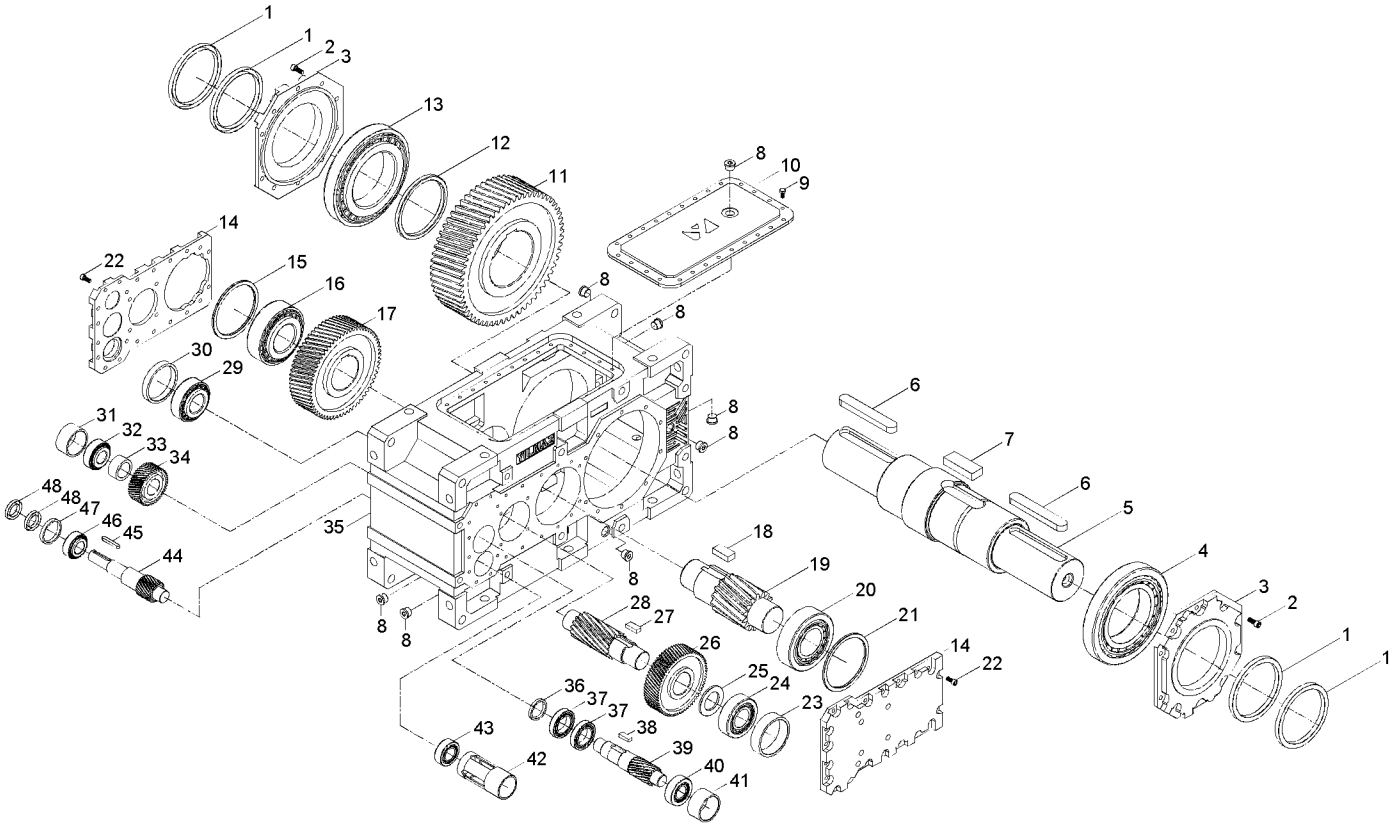

Standard HT...4.04 type basic part diagram. Parts may differ for special applications.

Standard Parts List

1- Seal	10- Top Side Cover	19- Gear	28- Gear	37- Bearing	46- Bearing
2- Bolt	11- Gear	20- Bearing	29- Bearing	38- Key	47- Spacer
3- Seal Cover	12- Spacer	21- Spacer	30- Spacer	39- Gear	48- Seal
4- Bearing	13- Bearing	22- Bolt	31- Spacer	40- Bearing	
5- Shaft	14- Side Cover	23- Spacer	32- Bearing	41- Spacer	
6- Key	15- Spacer	24- Bearing	33- Spacer	42- Tube	
7- Key	16- Bearing	25- Spacer	34- Gear	43- Bearing	
8- Oil Plug	17- Gear	26- Gear	35- Housing	44- Gear	
9- Bolt	18- Key	27- Key	36- Spacer	45- Key	

3.25- HT...4.05 Types

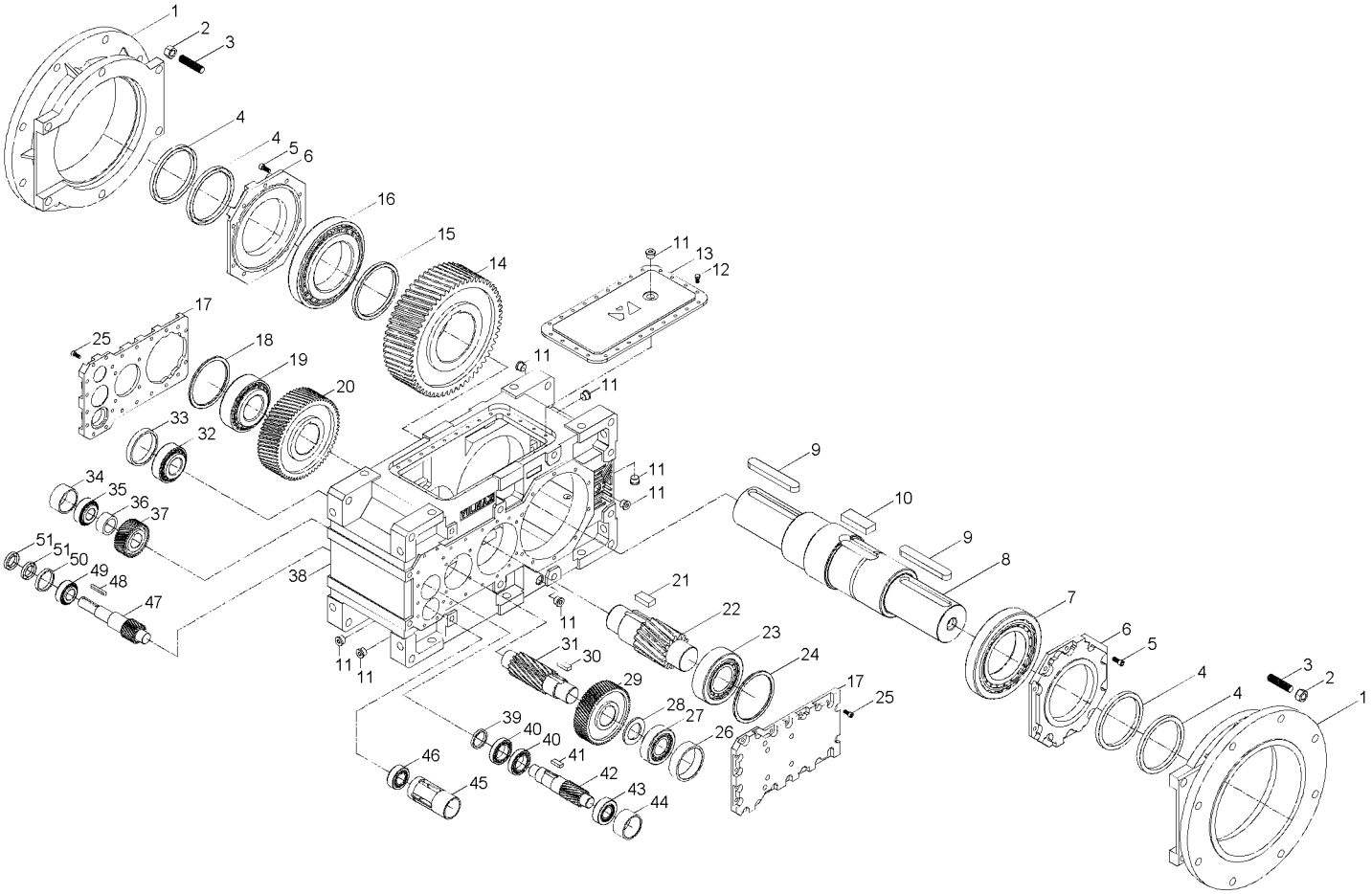

Standard HT...4.05 type basic part diagram. Parts may differ for special applications.

Standard Parts List

1- Flange	10- Key	19- Bearing	28- Spacer	37- Gear	46- Bearing
2- Nut	11- Oil Plug	20- Gear	29- Gear	38- Housing	47- Gear
3- Screw Pin	12- Bolt	21- Key	30- Key	39- Spacer	48- Key
4- Seal	13- Top Side Cover	22- Gear	31- Gear	40- Bearing	49- Bearing
5- Bolt	14- Gear	23- Bearing	32- Bearing	41- Key	50- Spacer
6- Screw Cover	15- Spacer	24- Spacer	33- Spacer	42- Gear	51- Seal
7- Bearing	16- Bearing	25- Bolt	34- Spacer	43- Bearing	
8- Shaft	17- Side Cover	26- Spacer	35- Bearing	44- Spacer	
9- Key	18- Spacer	27- Bearing	36- Spacer	45- Tube	

3.26- HT...4.08 Types

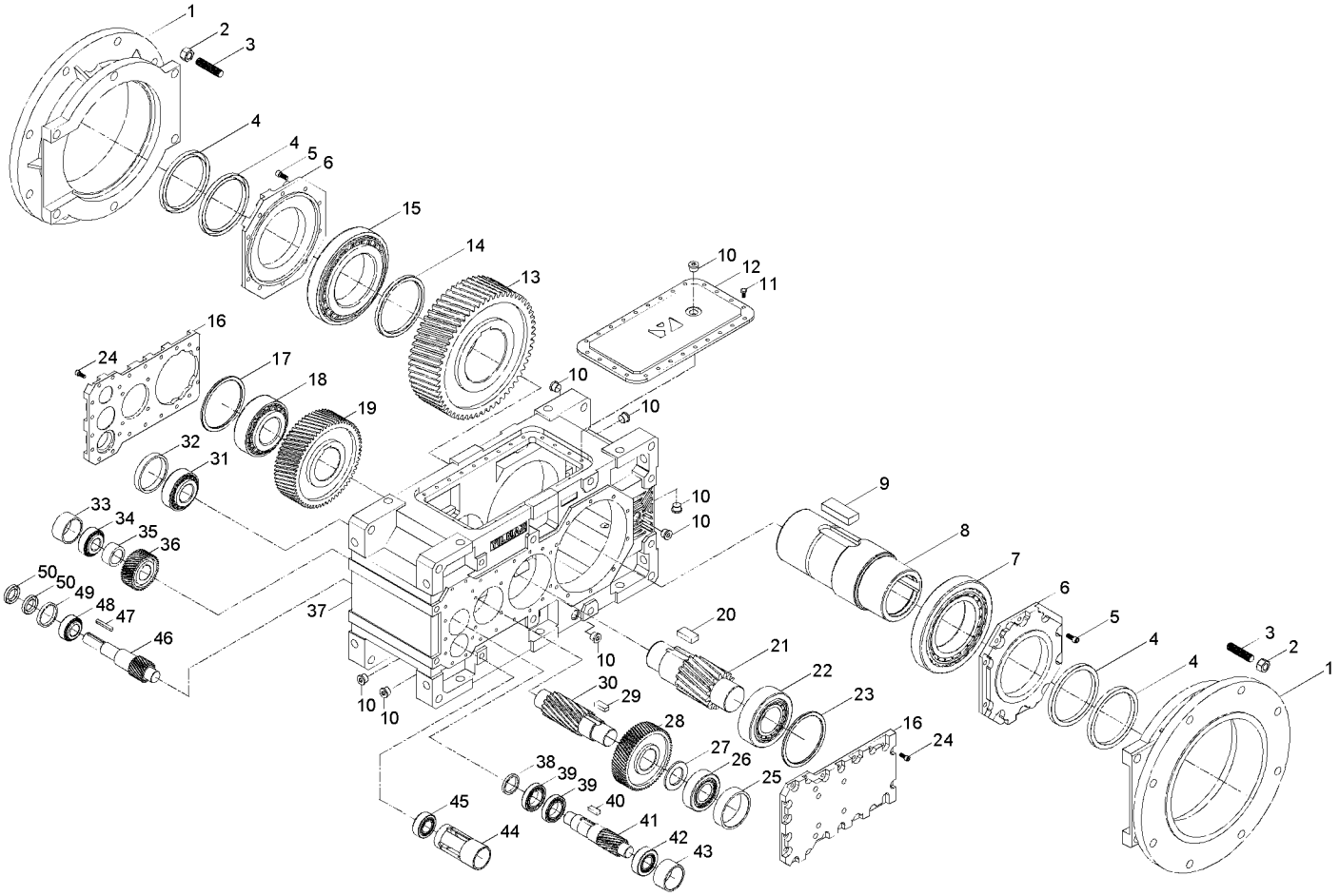

Standard HT...4.08 type basic part diagram. Parts may differ for special applications.

Standard Parts List

1- Flange	10- Oil Plug	19- Gear	28- Gear	37- Housing	46- Gear
2- Nut	11- Bolt	20- Key	29- Key	38- Spacer	47- Key
3- Screw Pin	12- Top Side Cover	21- Gear	30- Gear	39- Bearing	48- Bearing
4- Seal	13- Gear	22- Bearing	31- Bearing	40- Key	49- Spacer
5- Bolt	14- Spacer	23- Spacer	32- Spacer	41- Gear	50- Seal
6- Seal Cover	15- Bearing	24- Bolt	33- Spacer	42- Bearing	
7- Bearing	16- Side Cover	25- Spacer	34- Bearing	43- Spacer	
8- Hollow Output Shaft	17- Spacer	26- Bearing	35- Spacer	44- Tube	
9- Key	18- Bearing	27- Spacer	36- Gear	45- Bearing	

4-.Safety

4.1- Intended Use

The gearbox is designed for usage in industrial machines. Please refer to our catalogue or our web page for the maximum permitted torques and speeds. The most important maximum permitted values are indicated on the nameplate of the product, but the whole data can be found on our product catalogues. Using the product out of the product catalogue/ nameplate's permitted ranges will cancel the warranty / manufacturer declaration and SEVA-tec will not take any responsibility.

The gear units are intended for industrial machines and may only be used in accordance with the information provided in this manual, the product catalogue, and the nameplate of the gearbox. They comply with the applicable standards and regulations and meet the requirements of the directive 2006/42/EC. The gearbox must be started up, maintained and operated according to this manual. The gearbox must be incorporated with 2006/42/ EC confirming parts/machines.

Motors connected to the gear unit are only allowed to be operated in the frequency entries so that the data provided on the nameplate/catalogue of the gearbox is not exceeded and is in accordance with the nameplate/catalogue. The speed range will be provided on the name plate if SEVA-tec is informed that the gear unit will be used with frequency inverter. If not informed, the nameplate will have a single fixed speed and only this speed is allowed. The electric motor and frequency inverter must be in accordance with 2006/42/ EC

If the input of the gear unit is used with a variable speed gear unit, SEVA-tec must be informed before ordering. The maximum and minimum speeds will then be (speed range) stated on the nameplate. If this is not mentioned during the ordering process, the gearbox will have a fixed single input speed and only this speed is allowed.

If the gear unit will be driven by a belt / coupling / chain drive, etc., the gearbox is only allowed to be used according to the information on the nameplate and catalogue. A different speed, higher motor power, higher radial/axial loads etc. than what is stated on the nameplate/catalogue is prohibited.

The ambient temperature must be between 5° to 40°C and no corrosive media should attack the paint and the seals. Should the working conditions be different, SEVA-tec must be informed before an order is placed.

The gearbox maintenance (oil change / check) must be done according to this manual

4.2- Improper Use

Every usage which exceeds the limits stated above or on the nameplate and catalogue of the product (especially higher torques and speeds) is not compliant with the regulations, and thus prohibited. The operation of the gearbox is prohibited if:

-It was not mounted/installed according to regulations and this manual
-The gearbox is very dirty and soiled
-It is operated without lubricant
-It is operated out of the permitted values provided on catalogues and/or nameplate.

4.3- Safety Instructions

4.3.1- General Safety Instructions

4.3.1.1- Working on the Gearbox

- *Inappropriately executed work can lead to injury or damage.*
Please ensure that the gear unit is only installed, maintained, and dismantled by trained technicians.

- *Foreign objects spinning through the air can cause grave injury.*
Before operating the gear unit, check that there are no foreign objects or tools near the gearbox.

4.3.1.2- Operation

- *Touching hot surfaces can lead to burning.*
Do not touch the gearboxes if their operation temperatures are too high, or use suitable safety equipment like gloves.

- *Rotating machinery can lead to injuries. There is danger of being trapped or pulled in !*Keep a sufficient distance from rotating machinery. See relevant norms EN349 + A1 and EN13857.

4.3.1.3- Maintenance

- An unintentional start of the machine during maintenance work can lead to serious accidents.
Make sure no one can start the machine while you are working on it.

- Even a brief running of the machine during maintenance work can lead to accidents if the safety devices are not operating.
Make sure that all safety devices are mounted and active.

4.3.1.4- Lubrication

- Extended, intensive contact with oils can lead to skin irritations.
Avoid extended contact with oil, and clean oil off skin immediately

- Hot oil can cause scalding.
When changing oil, protect yourself against contact of hot oil.

4.3.1.5- Ambient Conditions

Standard gearboxes are allowed to work in ambient temperatures of 5° to 40°C unless differently specified on the nameplate. *Using the gear unit out of this range can cause damage to the gearbox or environment. At ambient temperatures above 40°C the surface temperature of the gearbox could be so high that it will cause burns when touched.*

STOP

If the gear unit will be used in outdoor settings, it must be protected from rain, snow, and dust. Substances which enter the gear unit through the seals can damage the gear unit. Observe the safety instructions for outdoor use EN12100 and EN 14121.

4.4- Tightening Torques
All screws with a specified tightening torque should always be tightened and checked with a calibrated torque wrench. Use the following torques for the threaded bores over the gear unit housing. For connecting elements refer to the mechanical installation part.

Bolt Size	Class	Tightening Torque [Nm]
M8	8.8	25
M10	8.8	48
M12	8.8	84
M16	8.8	206
M20	8.8	415
M24	8.8	714
M30	8.8	1428
M36	8.8	2482

4.5- In case of Fire
The gear unit itself is not combustible. However, it usually contains a synthetic or mineral gear oil.
Please observe the following if the gear unit is situated in a burning environment.

4.5.1- Suitable extinguishing agents, Protective equipment
Always keep suitable extinguishing and protective equipment like carbon dioxide, powder, foam and fog easily accessible around the gear unit.

High temperatures produce irritating steam .
Use a protective breathing apparatus.

4.5.2- Unsuitable extinguishing agents
Do not spray with water

5- Checks to be carried out before gearbox installation

If gear motors are used, please also refer to the manual of the motor manufacturer.

Before installing the gear unit, please check that it has been delivered in full and check for any transportation damage. Points to take into consideration before you start to install the unit;

- You have received the correct operation manual for your product.
- The gearbox and all its parts were transported without getting damaged.
- The gearbox is stored correctly according to the instructions in this manual.
- You have the latest product catalogue or you have access to our web page.

5.1- Transportation

Upon delivery of the gear unit, ensure that the delivery corresponds to the purchase contract and that there is no damage. If there is any transport damage, report it to the shipping company immediately, and inform us about the damage.

Use the upper foot connection holes for lifting up the gear unit by using eyebolts. The eyebolts should be capable to carry the weight of gearboxes. Do not hang additional loads on the gear box by lifting. Use suitable hoisting equipment that can hold the weight of the gear unit. Refer to the catalogue for various types of weights. If the gearbox is delivered with a steel carrying construction, use the construction holes to lift the gear unit. See drawing below for hoisting point

Do not stay beneath / under the lifting/hoisting equipment which may cause serious injuries by falling down objects, accidental movements, unexpected accidents.

STOP

Falling or hard placement can damage the gear unit.
Only use hoisting and securing equipment which is permitted for the size / weight of your gear unit. Ensure that the load is slowly and carefully handled and placed.

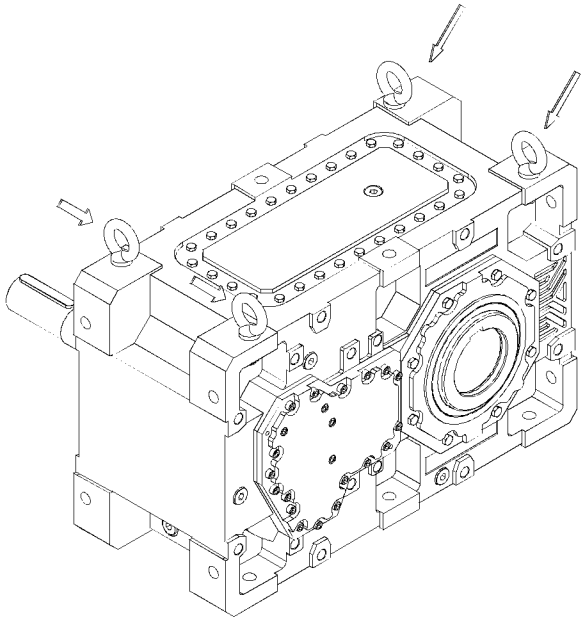

5.2- Storage
If the gear unit or gear motor will be stored up to 3 years refer to the following instructions:

With Packaging
-Use corrosion protection oil for the output shaft and connection surfaces like flange surface or foot assembling surface. Seal the unit in plastic wrap and pack it in a container. A moisture indicator should be placed around the container to observe the moisture. Relative atmospheric humidity should not exceed 50%. The container should be kept under a roof which protects from snow and rain. Under these conditions, the gear unit can be stored for up to 3 years with regular checks. The ambient temperature should be between -5° to 60° Celsius.

Without Packaging
-Use protection oil for the output shaft and connection surfaces like flange surface or foot assembling surface. If the packaging is used and the gearbox is stored without packaging, the ambient temperature should be between 5° to 60° Celsius. The gearbox must be kept under an enclosed roof with constant temperature and constant humidity not exceeding 50%. The storage should be free of dust and dirt and ventilated with a filter. If the gearbox is stored without packaging it is recommended not to store it for more than 2 years and regular checks during this time are recommended.

If stored in open areas protect against insect damage.

6- Installing The Gear Unit

6.1- Before you start

- Observe the gear unit for damages of storage or transportation. If there is any damage, please contact SEVA-tec.
- Please ensure that you have all necessary equipment for the installation such as spanners, torque, wrench, shims and distance rings, fixing devices for input and output elements, lubricant, bolt adhesive, etc..

- This manual is not for 94/9/EC (ATEX) conforming gear units. For 94/9/EC conforming gear units refer to the ATEX range manual. ATEX conforming gear units have name plates indicating the zone and the temperature class and are different from standard type gear units. Therefore, standard units cannot be installed in potentially explosive atmospheres.

6.2- Check the Shaft Dimensions to Fit

Type	Hollow Output Shaft Dia. [mm]	Hollow Output Shaft Tolerance. (H8)	Solid Output Shaft Dia. [mm]	Solid Output Shaft Dia. (DIN 748) (m6)	Type	Hollow Output Shaft Dia. [mm]	Hollow Output Shaft Tolerance. (H8)	Solid Output Shaft Dia. [mm]	Solid Output Shaft Dia. (DIN 748) (m6)
H.03	60	+0.04 0	70	+0.04 +0.02	**H.13**	190	+0.05 0	200	+0.05 +0.02
H.04	80	+0.03 0	80	+0.03 +0.01	**H.14**	210	+0.05 0	220	+0.05 +0.02
H.05	95	+0.04 0	100	+0.04 +0.01	**H.15**	230	+0.05 0	230	+0.05 +0.02
H.06	105	+0.04 0	110	+0.04 +0.01	**H.16**	240	+0.05 0	240	+0.05 +0.02
H.07	115	+0.04 0	120	+0.04 +0.01	**H.17**	-	-	250	+0.05 +0.02
H.08	125	+0.04 0	130	+0.04 +0.02	**H.18**	-	-	270	+0.05 +0.02
H.09	135	+0.04 0	140	+0.04 +0.02	**H.19**	-	-	290	+0.05 +0.02
H.10	150	+0.04 0	160	+0.04 +0.02	**H.20**	-	-	300	+0.05 +0.02
H.11	165	+0.04 0	170	+0.04 +0.02	**H.21**	-	-	320	+0.05 +0.02
H.12	180	+0.04 0	180	+0.04 +0.02	**H.22**	-	-	340	+0.05 +0.02

6.3- Check the Ambient Temperature

The ambient temperature must be between 5° to 40°C for standard type gear units. If there is different ambient conditions please contact SEVA-tec for special solutions.

6.4- Check the Voltage Supply

The standard gear motors are supplied with 230/400 V 50/60Hz up to 3kW including 3kW and 400/690 V 50/60Hz over 3kW and are indicated on the motors name plate unless it is differently ordered. If only the gear unit is supplied by SEVA-tec, please observe the name plate of the electric motor and the instructions provided by the supplier. Check the basic electric connection diagrams provided on the following pages.

STOP

Using wrong connection or voltage can damage the electric motor or environment.

The following wiring diagram is for standard 230/400 V 50Hz AC electric motors. For different voltages please contact SEVA-tec. For gear units supplied without motor, refer to the motor manufacturers user manual.

The electric connection must be done by experienced electric technician. The gearbox, the motor and the brake must be grounded to prevent potential differences of earth and gearbox / motor.

Pole	Nominal Power 400V, 50Hz	
	230V (Δ) / 400 V (Y)	400V (Δ)
2 or 4	≦ 3 kW	⩾ 4 kW
6	≦ 2,2 kW	⩾ 3 kW
8	≦ 1,5 kW	⩾ 2,2 kW
Operating Pr.	Direct	Direct or Y/Δ

Basic Motor Connection Wiring Diagram

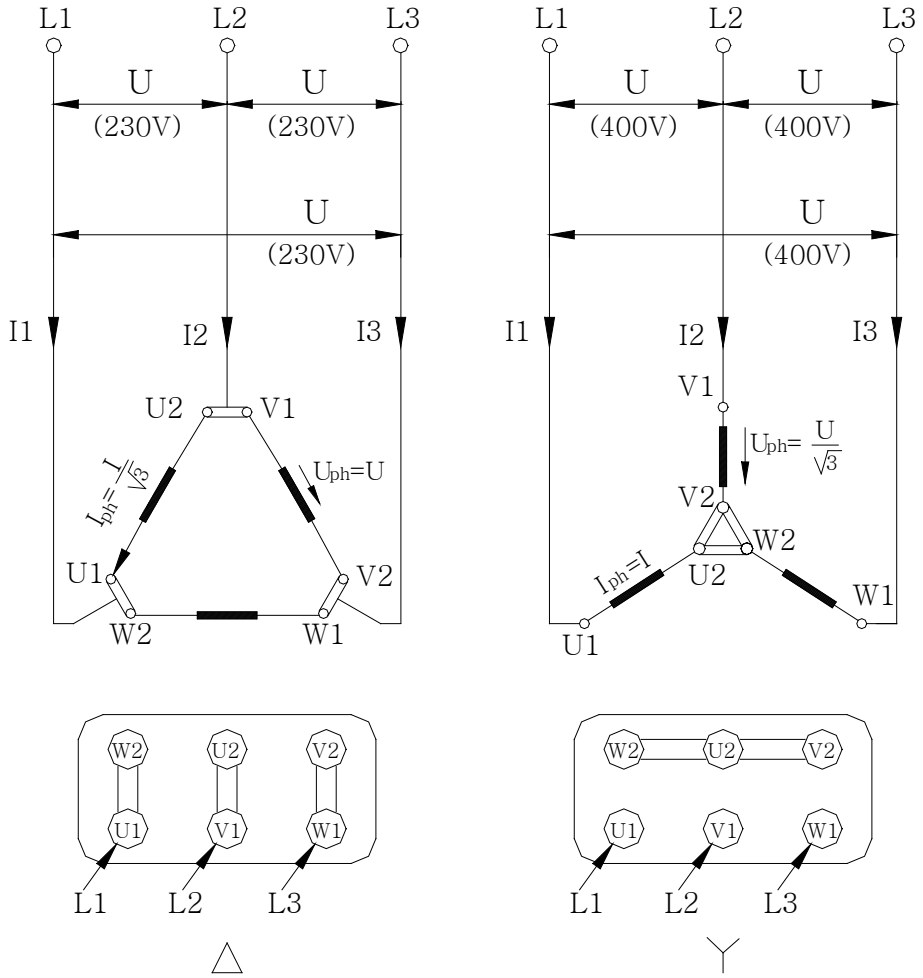

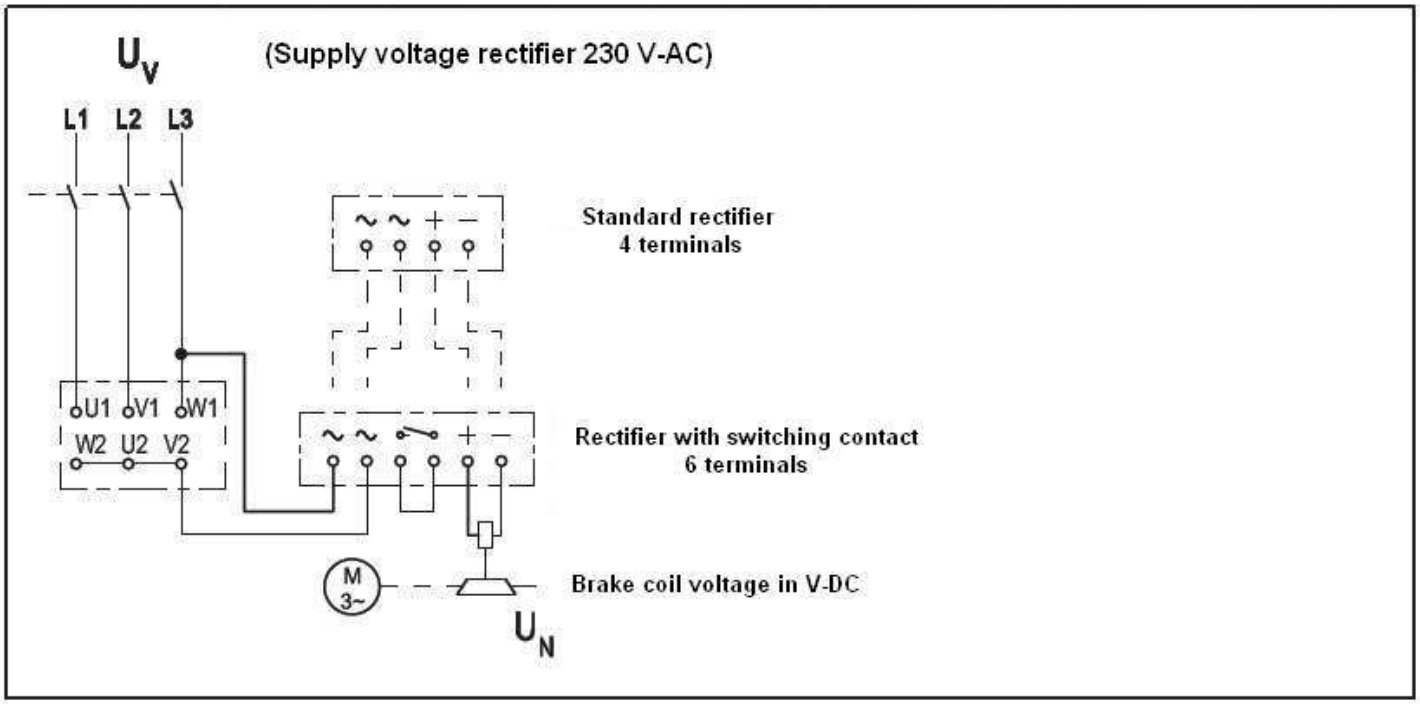

Supply: Phase-Starpoint

Bridge rectifier

U_N [VDC]=0.9 • U_V [VAC]

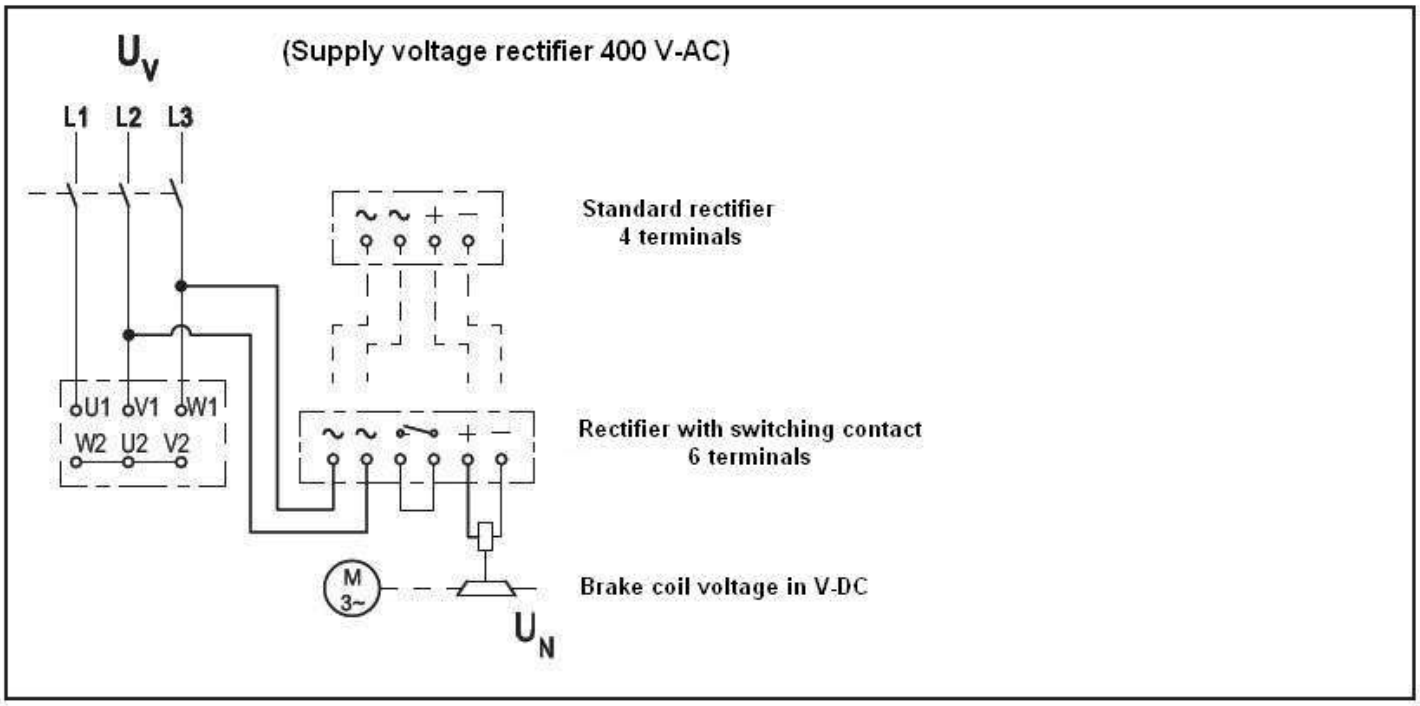

Supply: Phase-Phase

Half-wave rectifier

U_N [VDC]=0.45 • U_V [VAC]

6.5- Check the Mounting Position

The mounting position must be in accordance with the mounting position mentioned on the name plate. If different please contact SEVA-tec for possibilities of using in a different mounting position. Refer to the mounting positions and oil quantities in this manual and adjust the oil level accordingly with the recommended oil types given in this manual.

STOP *Do not mix synthetic oils with mineral oils which can cause serious damage on the gear unit.*

6.6- Usage of Breather Plug

Breather plugs are not required for H series under normal ambient and working conditions (up to 30° C ambient temperatures and up to 8 hours per day). SEVA-tec recommends breather plugs in case of heavy ambient conditions and long working hours. These will be delivered together with the gearbox. Replace the breather plug with the upper plug according to your mounting position.

Some plug positions are not machined according to mounting position. If no mounting position is mentioned while ordering the standard M1 position plugs are machined.

6.7- Check the Oil Level

On the oil plugs tables the oil plugs are shown. Please refer to these tables and ensure that the oil level is correct according to the mounting position by unscrewing the level plug and checking if oil comes out of it. If oil comes out tighten the plug again. If no oil comes out, remove the filling plug, and add oil until it comes out of the level plug. Once you have finished this, tighten both plugs. Please ensure that you are using the correct oil which is stated on the oil tables of this manual.

STOP

Do not mix synthetic oils with mineral oils which can cause serious damage on the gear unit.

6.8- Check Shaft Ends and Mounting Surfaces

Before you start installing be sure that all the connection elements are free of oil and dust. The output shaft may be protected by anti-corrosion oil. Please remove this by using commercially available solvents. When using this, do not touch the sealing lips or paint of the housing.

6.9- Cover Against Corrosive Ambient

If the gear unit will be placed on a corrosive ambient be sure that the output seals are covered so that no corrosive material, chemicals or water touches the seals. Any pressure from outside can allow substances to enter through the seals into the gearbox and cause serious damage to the gear unit. If pressure or abrasive material cannot be prevented from entering through the seals, please contact SEVA-tec for solutions.

STOP *Abrasive material, chemicals, water, positive or negative pressure exceeding 0,2 bar can affect or damage the sealing lip or output shaft. Substances entering through the seals can cause serious damage to the gear unit.*

6.10- Check Accessibility to Filling, Breather and Drain Plugs
The filling, breather and drain plugs must be freely accessible for further checking and service.

7- Mechanical Installation
The gear unit can only be installed using the given connection points such as feet and flanges.

Installing the gear unit without the given connection points can cause serious injuries by loosening or breaking the gear unit. Even if the gear unit is installed correctly according to this manual, please ensure that no will be harmed by accidental break downs.

The mounting plate must be rigid enough to avoid torsions, flat enough to prevent strains when the bolts are tightened, and stable enough to avoid vibrations. By using chain drives this becomes much more important because of the polygon effect on chain drives. According to your connection elements the maximal permitted radial and axial load of the gear unit must be in accordance with your application. Check the product catalogue for permitted radial loads and calculation.

If the output or input shaft is overloaded by radial or axial loads it can cause serious damage to the gear unit.

Secure the gear unit using 8.8 or higher quality bolts.

Cover all the turning parts to prevent touching. Turning parts can cause severe or fatal injuries.

For different types of basic installations please refer to the following illustrations:

7.1- Installing Customer Shaft with Shoulder

7.1.1- Use commercially available anti-seizing paste. Use a brush to apply the paste.

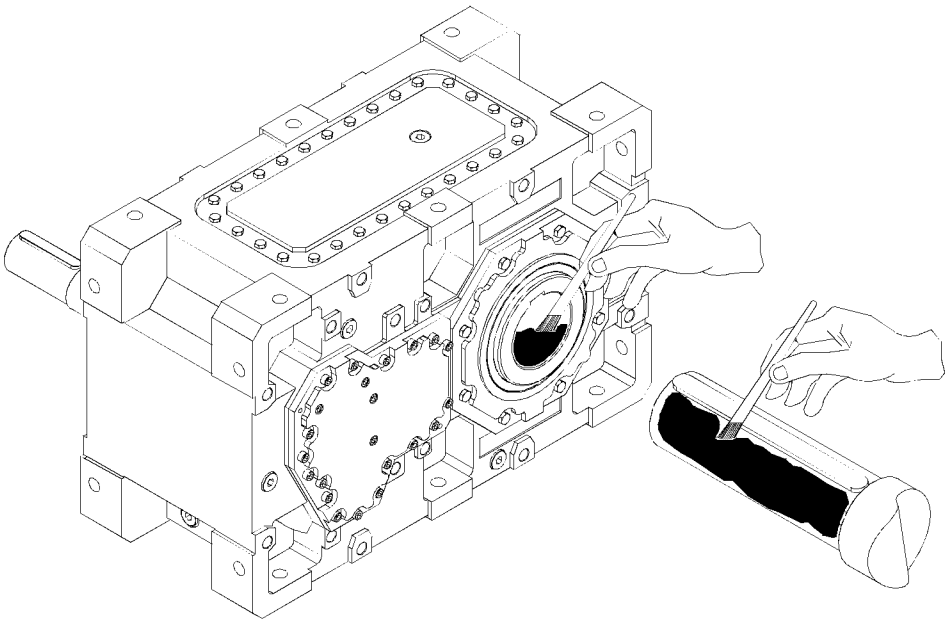

7.1.2-Fasten the bolt as shown below.

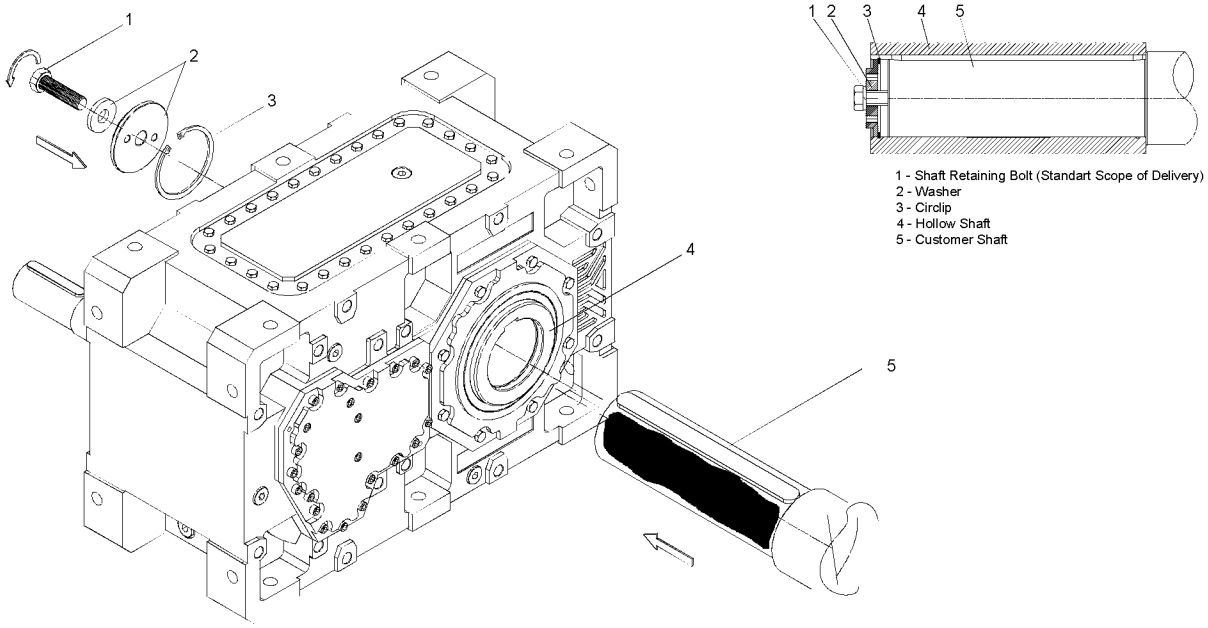

7.2- Disassembling Customer Shaft with Shoulder

7.2.1- Disassemble the bolt and take out the parts as shown

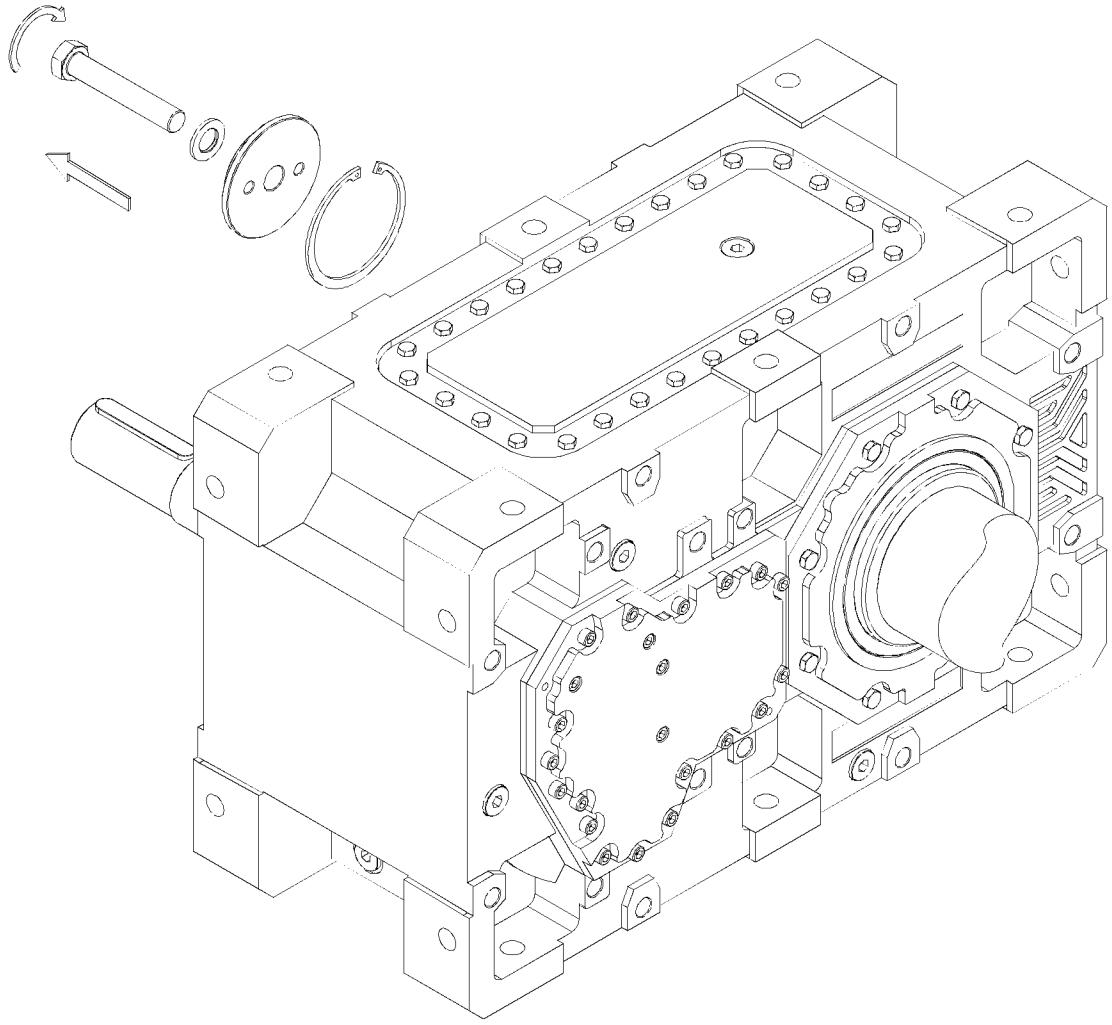

7.2.2- Use the disassembling kit from SEVA-tec and fasten the bolt as shown below to remove the output shaft.

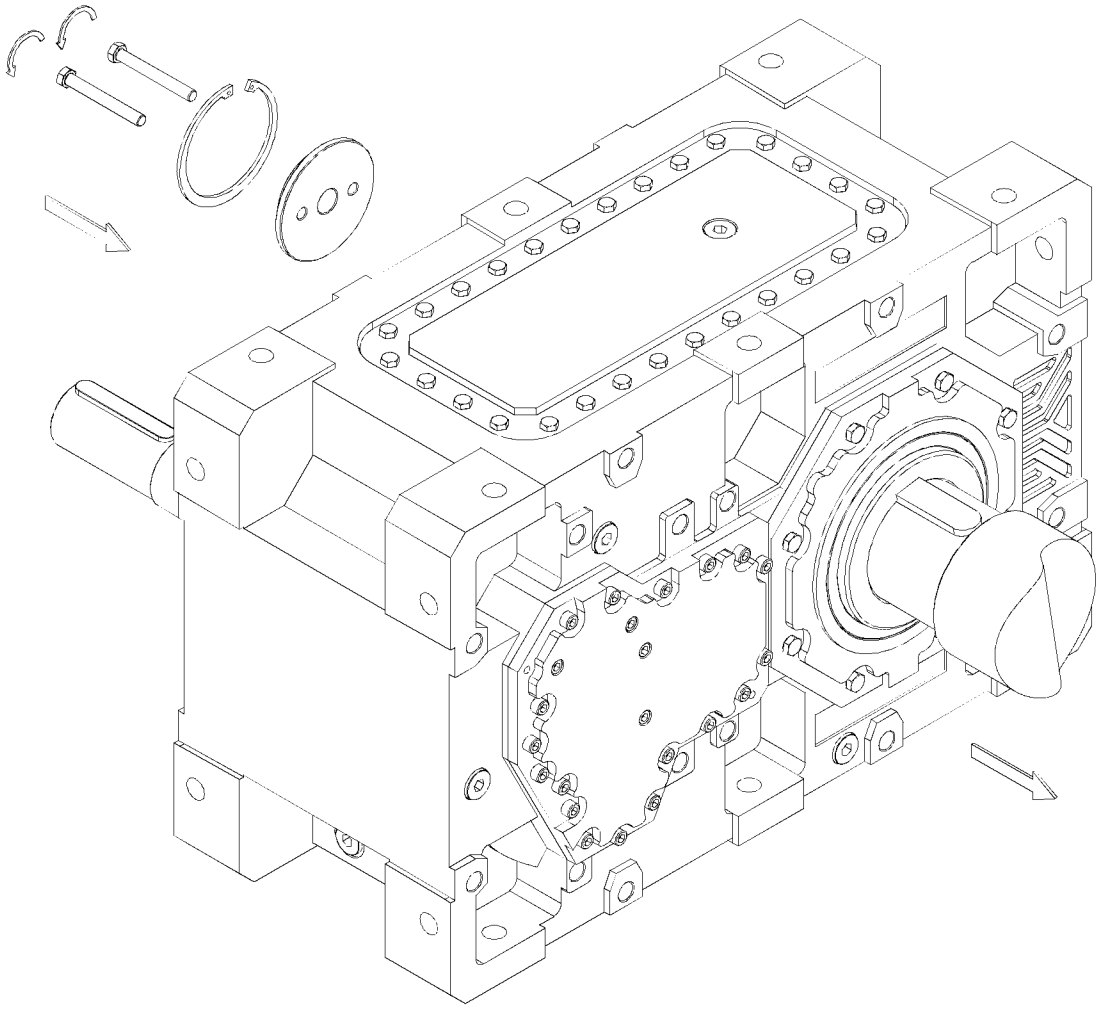

7.3- Fitting Output Shaft Elements

Use the following illustration to assemble output shaft units

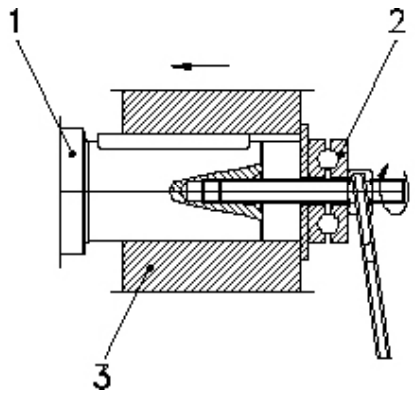

1) Gear Shaft End
2) Thrust Bearing
3) Coupling Hub

7.4- Correct Position of Output Shaft Elements

The output shaft unit (transmission elements) must be placed closely to the gear unit to get the radial load as close as possible.

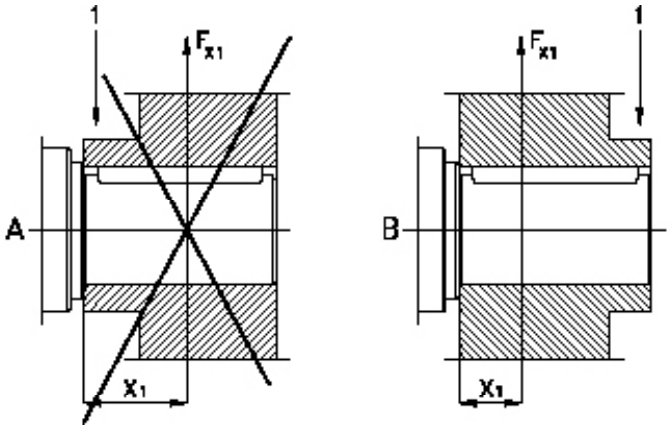

1) Hub

7.5- Fitting Couplings

7.5.1- When fitting couplings ensure that there is some clearance between the two shafts.

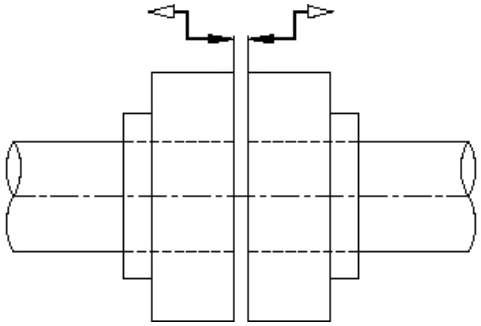

7.5.2- When fitting couplings ensure that there is no eccentricity between the two shafts.

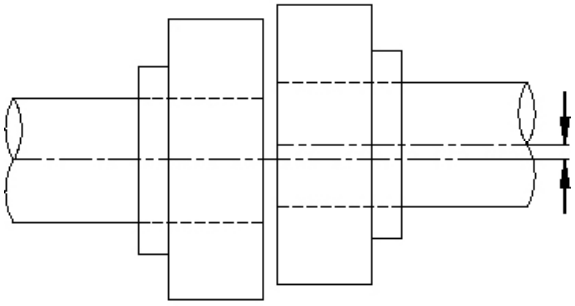

7.5.3- When fitting couplings ensure that the two shafts are not angular miss-aligned.

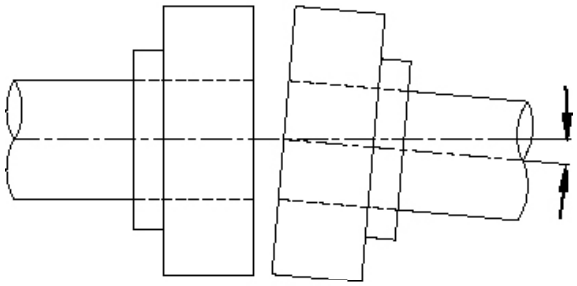

7.6- Shaft Tightening Torques

Use the following table for shaft tightening torques.

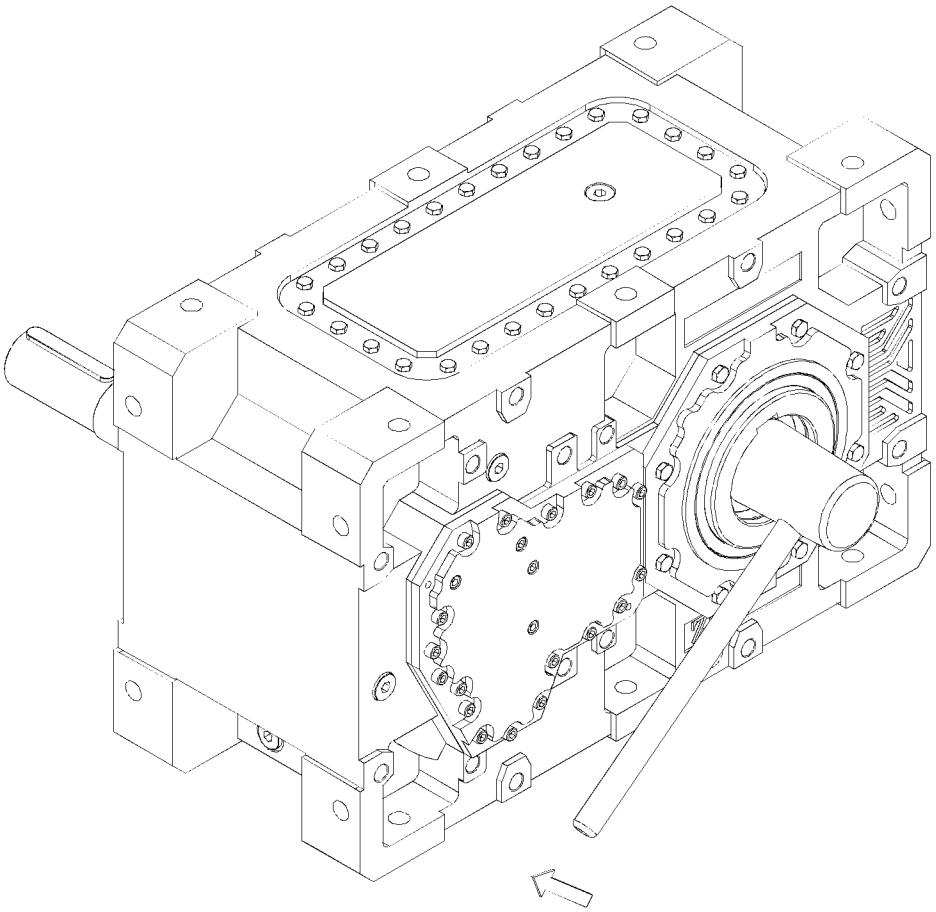

Type	Bolt	Tightening Torques [Nm]
H.03 - H.04	M20	415
H.05 - H.06 H.07 - H.08	M24	714
H.09 - H.10 - H.11 H.12 - H.13 - H.14	M30	1428
H.15 - H.16	M36	2482

7.7- Recommended Shaft Dimensions for H...00 Types

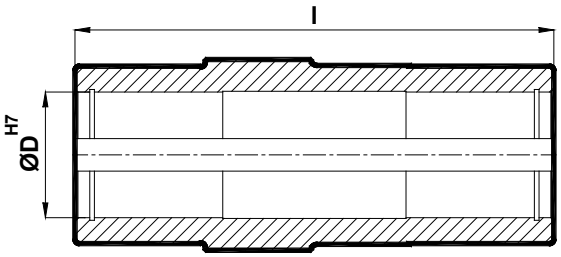

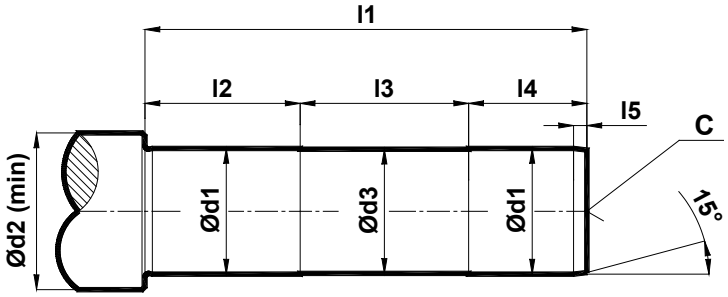

	d1	*d2*	*d3*	*l*	*l1*	*l2*	*l3*	*l4*	*l5*	*c*
H03	60 (h6)	74	59	280	255	95	90	70	4	M20
H04	80 (h6)	98	79	280	255	95	90	70	4	M20
H05	95 (h6)	118	94	330	301	115	100	86	5	M24
H06	105 (h6)	128	104	330	301	115	100	86	5	M24
H07	115 (h6)	138	114	390	361	135	120	106	5	M24
H08	125 (h6)	154	124	390	361	135	120	106	5	M24
H09	135 (m6)	162	134	470	436	165	140	131	6	M30
H10	150 (m6)	178	149	470	436	165	140	131	6	M30
H11	165 (m6)	198	164	540	505	185	170	150	7	M30
H12	180 (m6)	218	179	540	505	185	170	150	7	M30
H13	190 (m6)	228	189	670	626	225	220	181	8	M30
H14	210 (m6)	258	209	670	626	225	220	181	8	M30
H15	230 (m6)	278	229	760	710	255	250	205	8	M36
H16	240 (m6)	288	239	760	710	255	250	205	8	M36

8- Maintenance and Inspections

Under normal ambient and working conditions the gear unit should be checked according to the following intervals. (For definition of normal working conditions refer to the product catalogue : “Selecting Gearbox” section) ;

Item to Check / Replace	Every 3000 Working Hours or Every 6 Months	Every 4000 Working Hours	Every 10000 Working Hours or Every 3 Years	Every 25000 Working Hours
Check for Oil Leakage	x			
Check for Oil Level	x			
Check for Oil Leakage from Seals	x			
Check Bearing’s Noise		x (Change if necessary)		
Change Mineral Oil			x (See below for details)	
Change Synthetic - PAO Oil				x (See below for details)
Change Seals				x
Change Bearing Grease				x
Change Bearings				x
Check for Noise Changes				x

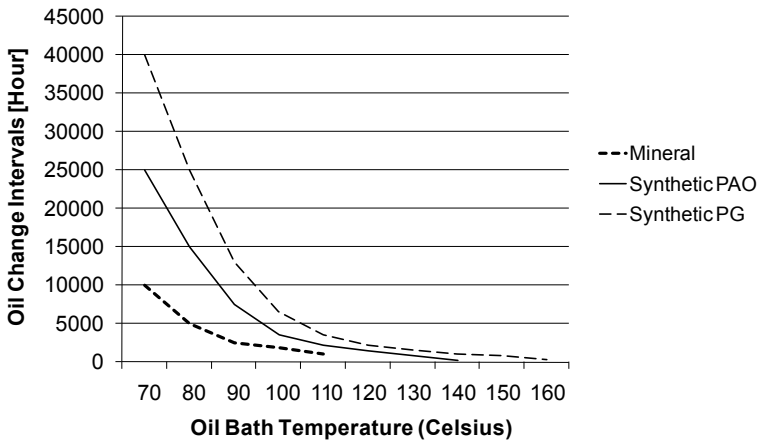

For normal ambient conditions 70°C oil bath temperature should be taken as reference

* For our H series gearboxes mineral oil is used unless it is differently ordered. For oil type and quantities refer to the following tables.

9- Lubrication
9.1- Oil Types

Lubricant	DIN 51517-3	Ambient Temperature (C)		ISO VG	Aral	Beyond Petroleum	Castrol	Klüber Lubrication	Mobil	Shell	Total
		Dip Lubrication	Forced Lubrication								
Mineral Oil	CLP	0 ... +50	–	680	Degol BG 680	Energol GR-XP 680	Alpha SP 680	Klüberoil GEM 1-680 N	Mobilgear 600 XP 680	Omala S2 GX 680	Carter EP 680
		-5 ... +45	–	460	Degol BG 460	Energol GR-XP 460	Alpha SP 460	Klüberoil GEM 1-460 N	Mobilgear 600 XP 460	Omala S2 GX 460	Carter EP 460
		-10 ... +40	+15 ... +40	320	Degol BG 320	Energol GR-XP 320	Alpha SP 320	Klüberoil GEM 1-320 N	Mobilgear 600 XP 320	Omala S2 GX 320	Carter EP 320
		-15 ... +30	+10 ... +30	220	Degol BG 220	Energol GR-XP 220	Alpha SP 220	Klüberoil GEM 1-220 N	Mobilgear 600 XP 220	Omala S2 GX 220	Carter EP 220
		-20 ... +20	+5 ... +20	150	Degol BG 150	Energol GR-XP 150	Alpha SP 150	Klüberoil GEM 1-150 N	Mobilgear 600 XP 150	Omala S2 GX 150	Carter EP 150
		-25... +10	+3 ... +10	100	Degol BG 100	Energol GR-XP 100	Alpha SP 100	Klüberoil GEM 1-100 N	Mobilgear 600 XP 100	Omala S2 GX 100	Carter EP 100
Synthetic Oil	CLP PG	-10 ... +60	–	680	Degol GS 680	Energsyn SG-XP 680	–	Klübersynth GH 6 -680	Mobil Glygoyle 680	Omala S4 WE 680	Carter SY 680
		-20 ... +50	–	460	Degol GS 460	Energsyn SG-XP 460	Aphasyn PG 460	Klübersynth GH 6 -460	Mobil Glygoyle 460	Omala S4 WE 460	Carter SY 460
		-25 ... +40	+5 ... +40	320	Degol GS 320	Energsyn SG-XP 320	Aphasyn PG 320	Klübersynth GH 6 -320	Mobil Glygoyle 320	Omala S4 WE 320	Carter SY 320
		-30 ...+30	0 ...+30	220	Degol GS 220	Energsyn SG-XP 220	Aphasyn PG 220	Klübersynth GH 6 -220	Mobil Glygoyle 30	Omala S4 WE 220	Carter SY 220
		-35 ... +20	-5 ... +20	150	Degol GS 150	Energsyn SG-XP 150	Aphasyn PG 150	Klübersynth GH 6 -150	Mobil Glygoyle 22	Omala S4 WE 150	Carter SY 150
		-40 ... +10	-8 ... +10	100	–	–	–	Klübersynth GH 6 -100	Mobil Glygoyle 100	–	–
	CLP HC	-10 ... +60	–	680	–	–	–	Klübersynth GEM 4-680 N	Mobil SHC Gear 680	Omala S4 GXV 680	Carter SH 680
		-20 ... +50	–	460	Degol PAS 460	Enersyn EP-XF 460	Alphasyn T 460	Klübersynth GEM 4-460 N	Mobil SHC Gear 460	Omala S4 GXV 460	Carter SH 460
		-30 ... +40	+5 ... +40	320	Degol PAS 320	Enersyn EP-XF 320	Alphasyn T 320	Klübersynth GEM 4-320 N	Mobil SHC Gear 320	Omala S4 GXV 320	Carter SH 320
		-40 ... +40	0 ...+30	220	Degol PAS 220	Enersyn EP-XF 220	Alphasyn T 220	Klübersynth GEM 4-220 N	Mobil SHC Gear 220	Omala S4 GXV 220	Carter SH 220
		-40 ... +40	-5 ... +20	150	Degol PAS 150	Enersyn EP-XF 150	Alphasyn T 150	Klübersynth GEM 4-150 N	Mobil SHC Gear 150	Omala S4 GXV 150	Carter SH 150
		-40 ... +40	-8 ... +10	100	–	–	–	Klübersynth GEM 4-100 N	Mobil SHC 627	Omala S4 GXV 100	–
Food Grade Oil	CLP NSF H1	-30 ... +25	+5 ... +25	220	–	–	Optileb GT 220	Klüberoil 4 UH1-220 N	Mobil SHC Cibus 220	Cassida Fluid GL-220	Nevastane SL 220
Biodegradable Oil	CLP E	-25 ... +40	+5 ... +40	320	–	–	Tribol BioTop 1418-320	Klübersynth GEM 2-320	–	–	Carter Bio 320
Mineral Grease [-20 .... +120 C Working Temperature]					Aralub HL3	Energrease LS 3	Spheerol AP3	Centoplex 2 EP	Mobilux EP 3	Gadus S2 V100 3	Multis Complex EP 2
Synthetic Grease [-30 .... +100 C Working Temperature]					–	Energrease SY 2202	–	Petamo GHY 133 N	Mobiltemp SHC 100	Gadus S5 V100 2	Multis Complex SHD 220

9.2- Changing the Oil

Refer to the nameplate to find out the correct oil type filled inside the gearbox.

- *Do not mix synthetic oils with mineral oils which will cause serious damage to the gear unit. The oil change must be carried out by using the filling, draining, and level plugs according to the mounting position illustrated in the oil plug tables.*

- *Extended, intensive contact with oils can lead to skin irritations. Avoid extended contact with oil, and clean oil off skin immediately.*

- *Hot oil can cause scalding. When changing oil, protect yourself against contacting hot oil, use protective gloves.*

9.3- Oil Quantities

	H and B Series Oil Quantities (l)																			
	H0321 H0322 B0323	H0323 B0322	H0422 B0423	H0423	H0521 H0522 B0523	H0523 B0522	H0622 B0623	H0623	H0721 H0722 B0723	H0723 H0724 B0724 B0722	H0822 B0823	H0823 H0824 B0824	H0922 B0923	H0923 H0924 B0924	H1022 B1023	H1023 H1024 B1024	H1122 B1123	H1123 H1124 B1124	H1222 B1223	H1223 H1224 B1224
M1	*8*	*8*	*10*	*11*	*13*	*14*	*16*	*19*	*21*	*23*	*30*	*32*	*35*	*40*	*45*	*55*	*58*	*62*	*85*	*95*
M3	*8*	*8*	*10*	*11*	*13*	*14*	*16*	*19*	*21*	*23*	*30*	*32*	*35*	*40*	*45*	*55*	*58*	*62*	*85*	*95*
M2	*10*	*11*	*13*	*13*	*18*	*19*	*23*	*25*	*37*	*42*	*50*	*46*	*55*	*63*	*73*	*85*	*100*	*112*	*125*	*150*
M4	*10*	*12*	*13*	*15*	*20*	*21*	*25*	*27*	*40*	*46*	*48*	*52*	*62*	*67*	*79*	*87*	*108*	*115*	*150*	*165*
M5	*9*	*10*	*11*	*12*	*16*	*17*	*20*	*23*	*34*	*38*	*41*	*44*	*53*	*58*	*67*	*70*	*91*	*100*	*134*	*141*
M6	*9*	*11*	*12*	*13*	*17*	*18*	*21*	*24*	*36*	*40*	*43*	*46*	*56*	*61*	*70*	*74*	*96*	*104*	*140*	*148*

	H1322 B1323	H1323 H1324 B1324	H1422 B1423	H1423 H1424 B1424	H1522 B1523	H1523 H1524 B1524	H1622 B1623	H1623 H1624 B1624	H1722	H1723 H1724 B1724	H1822	H1823 H1824 B1824	H1922	H1923 H1924 B1924	H2022	H2023 H2024 B2024	H2122	H2123 H2124 B2124	H2222	H2223 H2224 B2224
M1	*128*	*145*	*135*	*145*	*175*	*190*	*200*	*220*	*235*	*260*	*287*	*317*	*345*	*380*	*407*	*450*	*475*	*531*	*553*	*626*
M3	*128*	*145*	*135*	*145*	*175*	*190*	*200*	*220*	*235*	*260*	*287*	*317*	*345*	*380*	*407*	*450*	*475*	*531*	*553*	*626*
M2	*180*	*190*	*215*	*225*	*270*	*290*	*280*	*310*	*340*	*365*	*400*	*444*	*518*	*555*	*608*	*666*	*712*	*785*	*813*	*905*
M4	*190*	*205*	*234*	*245*	*290*	*315*	*300*	*335*	*364*	*387*	*432*	*475*	*550*	*600*	*651*	*713*	*765*	*840*	*870*	*960*
M5	*165*	*178*	*198*	*209*	*248*	*265*	*258*	*282*	*332*	*350*	*398*	*432*	*506*	*546*	*586*	*656*	*696*	*773*	*792*	*883*
M6	*173*	*187*	*208*	*219*	*260*	*278*	*270*	*296*	*340*	*359*	*405*	*440*	*511*	*552*	*591*	*661*	*704*	*780*	*801*	*891*

9.4- Oil Plugs

Oil Plugs for H Series		
Mounting Positions	M1	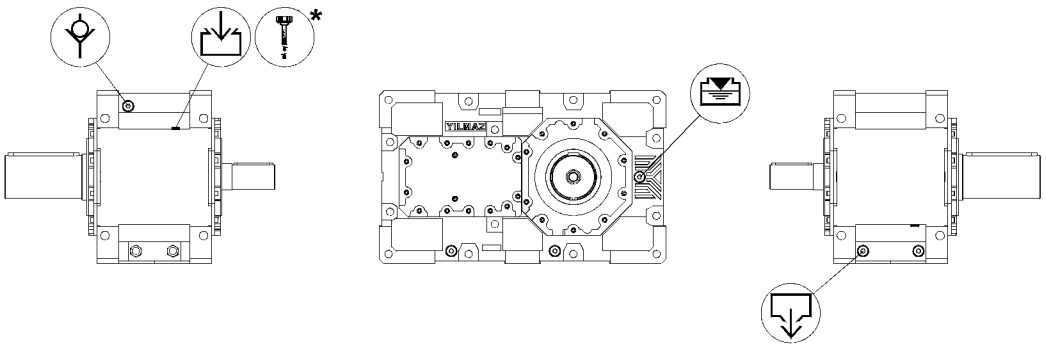
	M2	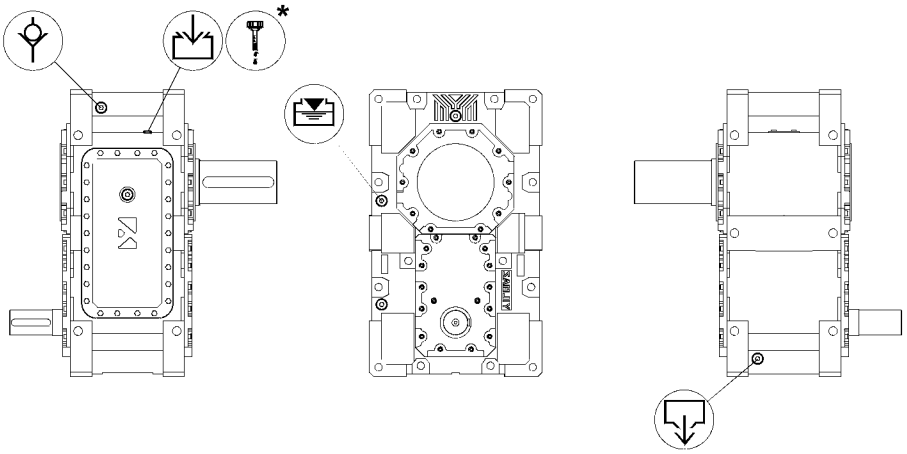
	M3	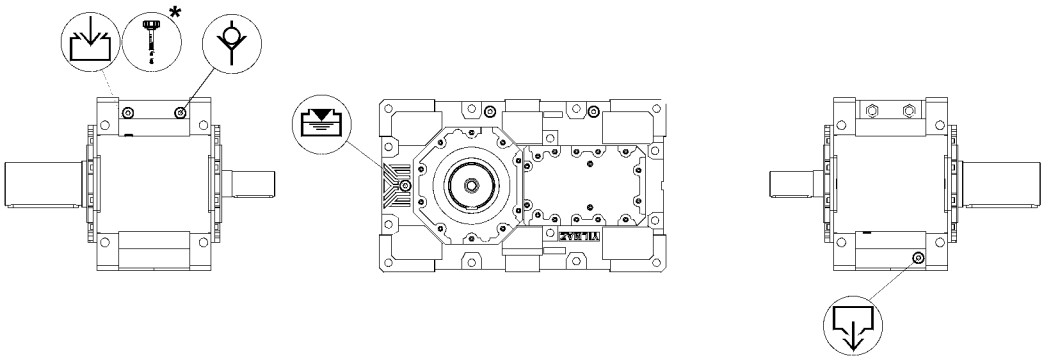

:Oil Filling :Drain Plug :Oil Level :Vent Plug :Oil Dipstick

*:Option

9.4- Oil Plugs

Oil Plugs for H Series		
Mounting Positions	M4	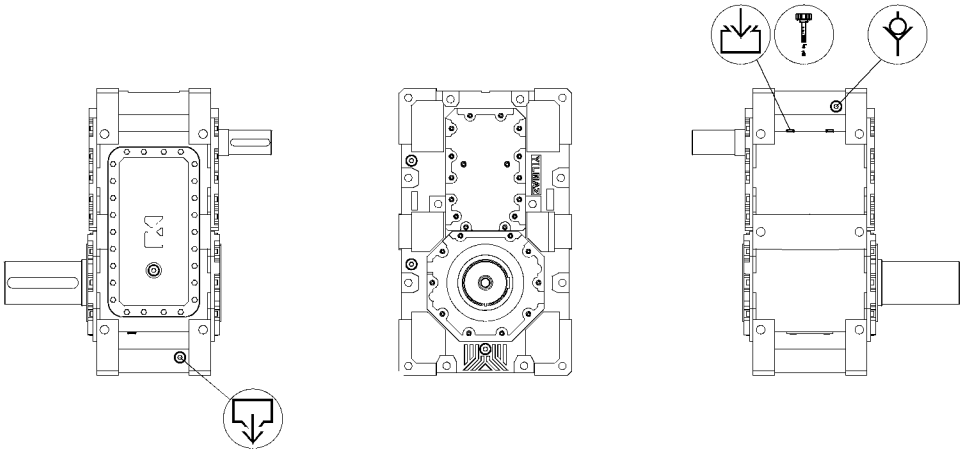
	M5	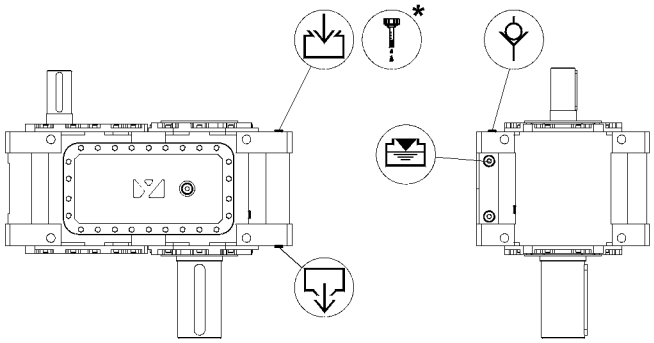 It is given for the gearboxes which are without additional oil supply options and with sealed bearings.
	M6	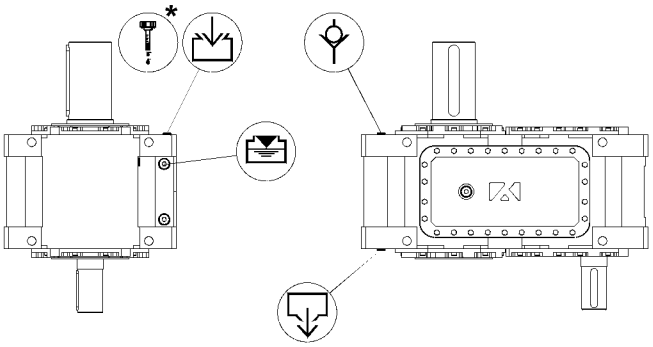 It is given for the gearboxes which are without additional oil supply options and with sealed bearings.

:Oil Filling :Drain Plug :Oil Level :Vent Plug :Oil Dipstick

*:Option

9.5- Mounting Positions

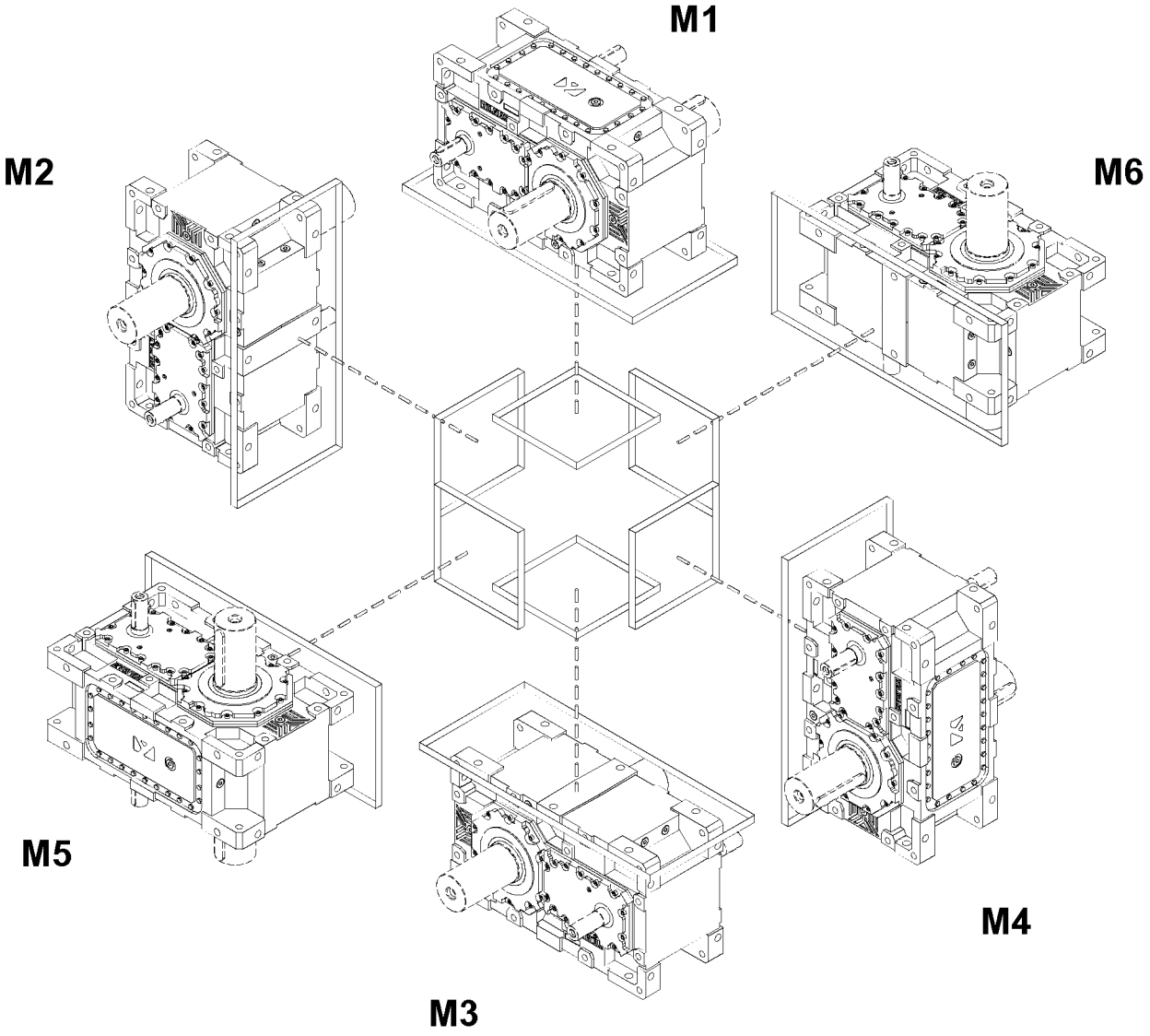

10- Cooling Options

Cooling Options	
F **Fan Cooling**	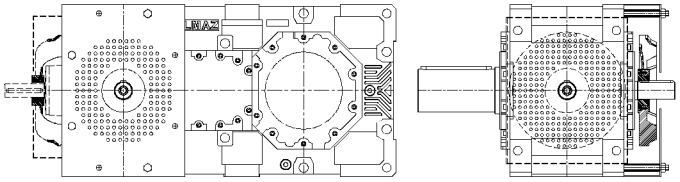
S **Cooling Coil**	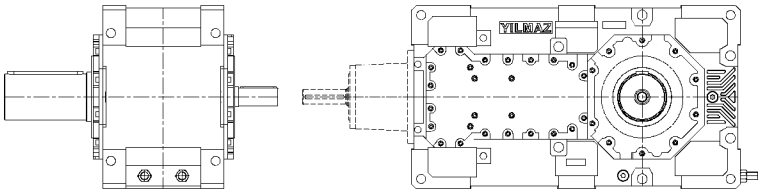
HE1 **Heat Exchanger with External Motor Pump**	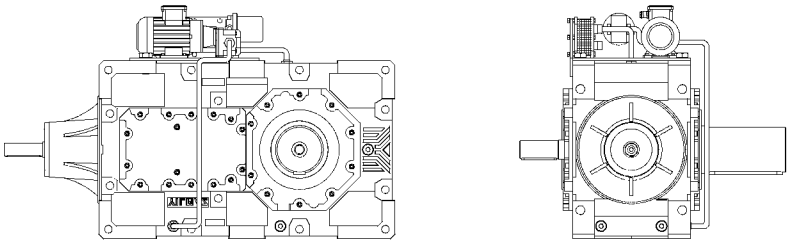
HE2 **Heat Exchanger with Shaft End Pump**	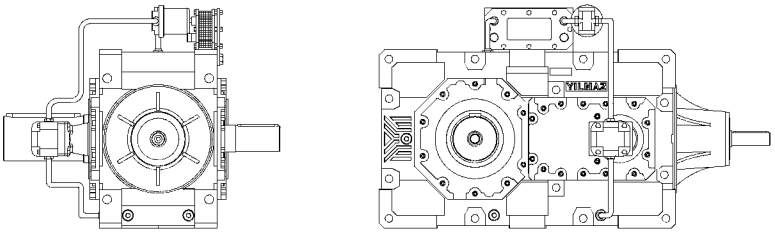
R **Air / Oil Heat Exchanger**	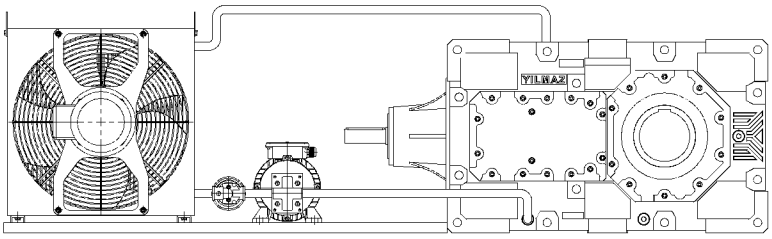

10.1- Fan Cooling ;

Standart Scope of Delivery ;
- Integrated fan on the input shaft
- Fan cover

The hatched areas shown below on the drawing must be kept free for clean and easy air intake .

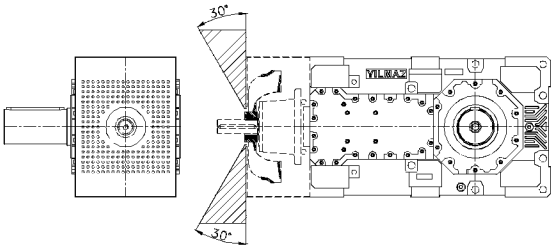

10.2- Cooling Coil ;

Standart Scope of Delivery ;
- Cooling Coil at the bottom of Gearbox
- Inlet and outlet ports for cooling water

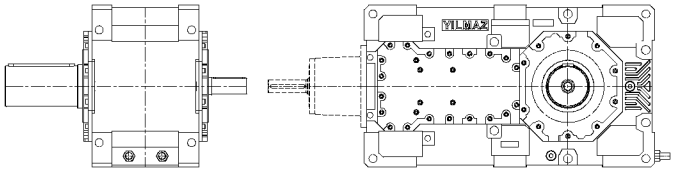

Maximal water inlet temperature must be 30ºC. Minimum water flow rate for gear units with cooling coil must be 4 l/min for H03/B03....H08/B08 and 8 l/min for H09/B09....H15/B15. There are inlet and outlet ports for customers. Port sizes can be found in the table below.

Gearbox Size	Pipe Connection Diameter	Flow Rate (l/min)	Max. Water Inlet Temperature (C)
H03...-H08 **B03...-B08**	*G 1/2"*	*4....6*	*30*
H09...-H15 **B09...-B15**	*G 3/4"*	*8....10*	*30*

10.3- Cooling with Heat Exchanger

You can see the minimum cooling water flow rate for heat exchanger types below. Maximum cooling water inlet temperature must be 30ºC.

Heat Exchanger Type	Cooling Power [kW]	Oil Flow Rate [l/d]	Pomp Power [kW]	Min. Cooling Water Flow Rate [l/d]
E1	*1,5*	*5,6*	*0,18*	*2,2*
E2	*3,0*	*5,6*	*0,18*	*5,6*
E3	*5,0*	*11,5*	*0,37*	*7,2*
E4	*10*	*22,4*	*0,75*	*14*
E5	*20*	*46,2*	*1,5*	*29*
E6	*30*	*72,8*	*2,2*	*43*
E7	*45*	*98*	*3,0*	*65*
E8	*60*	*114*	*3,0*	*80*
E9	*80*	*136*	*7,5*	*115*
E10	*100*	*173*	*7,5*	*140*

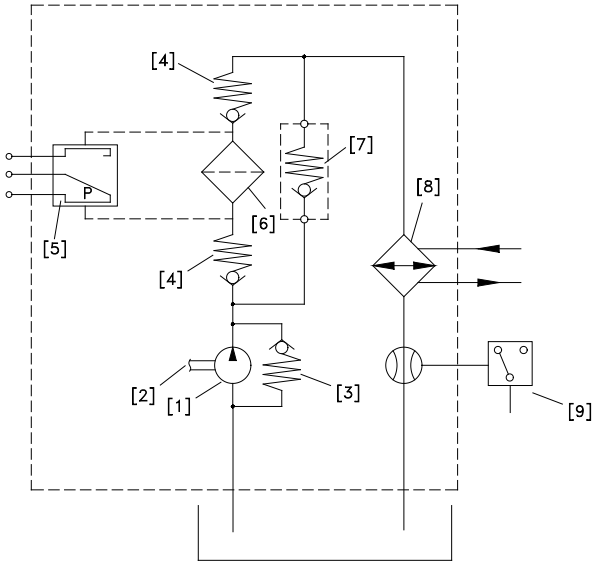

Flow Diagram
Heat Exchanger (Shaft End Pump)

1 - H ; 4 cm/rev pump
B ; 16 cm/rev pump
2 - Shaft end of gearbox
3 - 3 bar pressure valve
4 - Bypass valve (optional)
5 - 20 µ oil filter
6 - Pressure differential led (optional)
7 - Bypass valve (optional)
8 - Flow switch (optional)

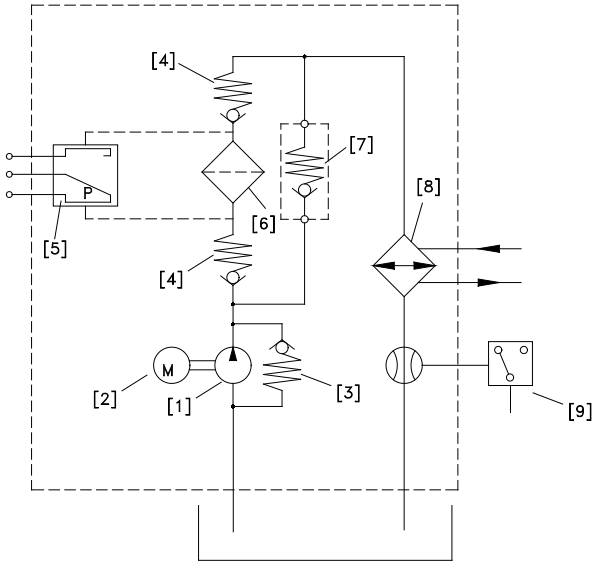

Flow Diagram
Heat Exchanger (External Motor Pump)

1 - 4 cm/rev pump
2 - 0,37 kW, 1400 rpm pump motor
3 - 3 bar pressure valve
4 - Bypass valve (optional)
5 - 20 µ oil filter
6 - Pressure differential led (optional)
7 - Bypass valve (optional)
8 - Flow switch (optional)

10.4- Cooling with Air / Oil Heat Exchanger ;

Technical information about air / oil heat exchangers can be found below. All technical information is valid for ambient temperatures of 20° C.

Air / Oil H. Exchanger Type	Cooling Capacity [kW]	Oil Volume [l/m]	Pump Motor Power [kW]
R1	*6,0*	*62*	*2,2*
R2	*9,5*	*62*	*2,2*
R3	*17,5*	*98*	*3,0*
R4	*25*	*98*	*3,0*
R5	*29,5*	*98*	*3,0*
R6	*45*	*98*	*3,0*
R7	*60*	*160*	*7,5*
R8	*75*	*160*	*7,5*

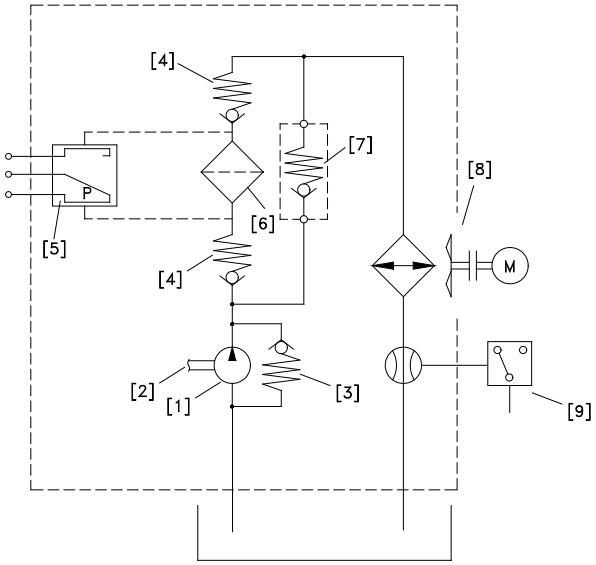

Flow Diagram
Air / Oil Heat Exchanger (Shaft End Pump)

1 - Shaft end pump
2 - Shaft end of gearbox
3 - 3 bar pressure valve
4 - Bypass valve (optional)
5 - Pressure differential led (optional)
6 - 20 µ oil filter
7 - Bypass valve (optional)
8 - Air / oil heat exchanger
9 - Flow switch (optional)

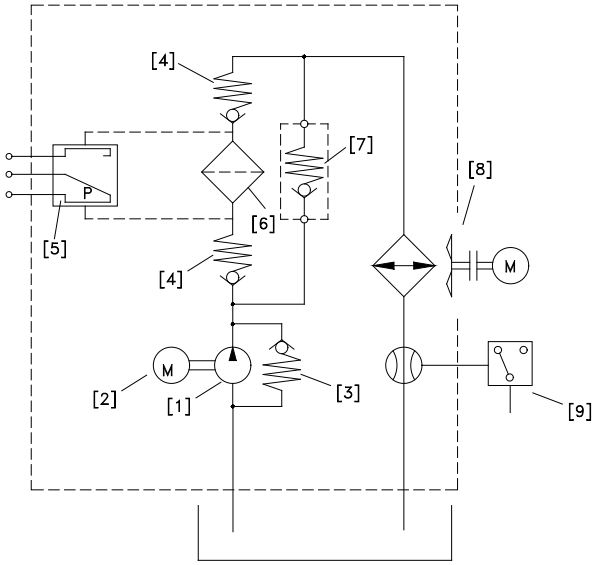

Flow Diagram
Air / Oil Heat Exchanger (External Motor Pump)

1 - External pump
2 - Pump motor
3 - 3 bar pressure valve
4 - Bypass valve (optional)
5 - Pressure differential led (optional)
6 - 20 µ oil filter
7 - Bypass valve (optional)
8 - Air / oil heat exchanger
9 - Flow switch (optional)

11- Troubleshooting Guide

All instructions recommended below must be carried out by professionally trained mechanics or electricians. SEVA-tec must be informed before any modification is made to the gear unit. An oil change can be carried out without consultation. All modifications or executions without the knowledge of SEVA-tec are at the user's own risk.

ID	Problem	Observation	Remedy
001	Gearbox Does Not Start Up	You hear no noise and shaft is not rotating. You are not using any driver or frequency inverter.	Please Check the voltage supply and frequency of your electric connection. They must be in accordance with the nameplate of the motor. Observe motor manufacturers start up manual. If you are still having issues, go to ID001.
002	Gearbox Does Not Start Up	You hear no noise and shaft is not rotating. You are using a frequency inverter or driver.	Please observe the frequency inverter/driver manual. Check the motor by connecting the motor directly to the supply voltage to determine if the problem is with the inverter. If you are still having issues, go to ID001.
003	Gearbox Does Not Start Up	You hear some noise, but the motor and the gear shaft are not rotating. You are not using any driver/frequency inverter or brake motor.	Please Check the voltage supply and frequency of your electric connection. They must be in accordance with the nameplate of the motor. Observe motor manufacturers start up manual. If the same problem persists, the load may be too great for the chosen motor. Loosen the gearbox from the load/torque. If this works, the starting torque is insufficient and higher motor power is needed. For monophase motors, check the starting up condensator and running condensator as well. If you are still having issues, refer to ID100.
004	Gearbox Does Not Start Up	You hear some noise, but the motor and the gear shaft are not rotating. You are using a driver or frequency inverter.	Please observe the frequency inverters or drivers manual. To determine the source of the fault, disconnect the motor from the converter. Connect the motor directly to the mains including safety devices. If you are still having issues, go to ID 100.
005	Gearbox Does Not Start Up	You hear some noise, but the motor and the gear shaft are not rotating. You are using a brake motor.	Please check the supply voltage and frequency of the mains connection. These values should be according to the nameplate of the gear motor. Check the operating instructions of the motor manufacturer. Make sure that the brake is in order. Examine the operating instructions of the motor brake. If no solution is found, supply power to the brake individually, for example 198V DC. If a clicking sound is heard, the brake will open. If you do not hear this sound, the brake or the rectifier is damaged. When the brake is active, the motor is supplied with voltage. If the problem persists, the motor may be oversized for the load. Go to ID 003.

Troubleshooting Guide

ID	Problem	Observation	Remedy
006	Gearbox Does Not Work in Low Speeds/ frequencies.	You are using a frequency inverter.	At low speeds, the motors frequency is too low. The parameters of the motor and the inverter must be optimised. The efficiency of the gearbox may be too low at low speed, especially for helical worm gear units. The recommended frequency range is 20-70Hz for helical worm gear units, 10-70 Hz for helical gear units. Use a stronger motor power or change the gear ratio of the gearbox to operate in the recommended frequency range.
007	Transmission does not start in the morning or after a long break	Ambient temperature is below +5° Celsius.	The oil is not in accordance with your working conditions. Change to lower viscosity oils. Refer to the owner's manual for the correct oil selection. Control the engine ambient temperature with a heater. If the problem persists, select an engine with higher power.
008	Gearbox is Heating Up too Much	The gearbox is used below 40 °C ambient temperature.	Measure the surface temperature of the gearbox under full load. If the temperature is below 80°C, it is OK. All ATEX certified gearboxes are designed to operate below 120°C. If the ambient temperature of ATEX gearboxes is above 120°C, be sure to shut down the operation and contact SEVA-tec. If a gearbox without ATEX certification is operated above 80°C ambient temperature, check the lubrication type and oil quantity according to the mounting position. Check the mounting position on the gearbox nameplate. If it does not match the current mounting position, go to ID 100.
009	Gearbox is Heating Up too Much	You are using a helical gear unit. Ambient temperature is lower than 40°C.	Measure the surface temperature of the gearbox under full load. If the temperature is below 80°C, it is OK. All ATEX certified gearboxes are designed to operate below 120°C. If the ambient temperature of ATEX gearboxes is above 120°C, be sure to shut down the operation and contact SEVA-tec. If a gearbox without ATEX certification is operated above 80°C ambient temperature, check the lubrication type and oil quantity according to the mounting position. Check the mounting position on the gearbox nameplate. If it does not match the current mounting position, go to ID 100.
010	Gearbox is Heating Up too Much	Ambient temperature is over +40° Celsius	Standard gearboxes are designed for ambient temperatures below 40°C. If the ambient temperature is above 40°C, a special solution must be used. Please contact SEVA-tec GmbH.
011	Gearbox is noisy	Noise is regular and continuous	Check your moving parts for noise. Disassemble the gearbox and run without load. If you still hear the noise, motor bearings or gearbox bearings are defect. Change bearings. Go to ID 100
012	Gearbox is noisy	Noise is random	Check Your moving parts for noise. Disassemble the gearbox and run without load. If the noise is still audible in this case, there may be particles in the oil of the gearbox. Change the oil and check it. If there are metal particles in the oil, the gearbox is damaged. Go to ID100.

Troubleshooting Guide

ID	Problem	Observation	Remedy
013	Gearbox is noisy	Regular knocking noise	Check your moving parts for noise. Disassemble the gearbox and run without load. If you still hear the noise one of the gears inside is defect. Go to ID 100
014	Gearbox is noisy	Regular noise increase and decrease	Check the output shaft for concentricity. Disconnect the gearbox from the machine. If you continue to hear the noise, one of the gears probably has a runout. Follow ID 100.
015	Gearbox is noisy	Gear motor with brake makes irregular noises.	Low random clicking noise may come from the brake disk, which is fine. If the noise level is too high, the brake may be defective or the air gap of the brake disk needs adjustment.
016	Gearbox is noisy	An inverter is used and the volume changes according to the speed.	The parameters of the frequency inverter are not optimised for the frequency range of the motor used. Read the operating instructions of the converter. If the problem persists, possibly change the transmission ratio of the gearbox. Follow ID 100.
017	Oil is Leaking	Oil Leakage from Seal	If the ambient temperature is over 40°C or the operating time without a break is over 16 hours, please fit a breather screw. To do this, read the gearbox bleeding instructions. If it does not help either, a seal may be damaged. Follow ID 100.
018	Oil is Leaking	Oil Leakage from Plug	Check the position of the vent screw. In every assembly position, the vent screw should be in the uppermost position. The screw is sometimes not tight enough. There are some particles sitting under the rubber surface of the screw. Clean and reassemble the screw. If the problem continues, go to ID 100.
019	Oil is Leaking	Oil Leakage from Housing	Find the place where the oil is leaking. It may be that the oil is coming out of the seal or the vent but is flowing over the housing. If this is the case, go to ID018/019. If you are sure that the oil is coming out of the housing, the housing may have a micro-crack. Go to ID 100.
020	Oil is Leaking	Oil Leakage from Cover	The seal under the lid is damaged. Remove the lid and replace the seal. Fit the cover and tighten the cover screws. If the problem is not solved, go to ID 100.
021	Gearbox has regular runout	A torque arm is used	The concentricity error of the gearbox is caused by the connection point. The air gap between the shaft and the hub does not have a proper fit. It has negative influences on the gearbox, especially when using a torque arm.
022	Gearbox has random runout	A torque arm is used.	The concentricity error of the gearbox is caused by the connection point. The air gap between the shaft and the hub does not have a proper fit. It has negative influences on the gearbox, especially when using a torque arm.
023	Motor is heating up	Motor is running over its nominal current	The motor power is not enough or some overload to the motor is possible. The motor may be defect. Go to ID 100
024	Motor is heating up	Ambient is dusty	Check the self-cooling via the motor ribs. If a frequency inverter is used, a forced cooling fan may be necessary at low speed. Go to ID 100.

ID	Problem	Observation	Remedy
025	Motor is running but gearbox shaft is not rotating	Friction noise occurs	Some elements (gears, shafts) may be defective. Go to ID 10.
026	Gearbox Housing is Defect	You are using chain drive or pinion gear	The radial load or poligon effect of the chain may have caused the damage. Check if mounting screws are loose or if the mounting base is loose. Check if you are using the correct diameter of chain drive and you are not exceeding max. allowed radial load. Check the position of your output element, re-calculate your radial load and check if this suits the maximum allowed radial load. Go to ID 100
027	Output Shaft is Defect	You are using chain drive or pinion gear	The radial load or poligon effect of the chain may have caused the damage. Check the position of your output element, re-calculate your radial load and check if this suits the maximum allowed radial load. Go to ID 100.
028	Gearbox is stopping too late	A brake motor is used	Check the brake rectifier, the brake disk, and the wiring of the motor brake.
029	Gearbox is starting too late	A brake motor is used	Check the brake rectifier, the brake disk, and the wiring of the motor brake.
100	Service Required	No self solution found	Please contact SEVA-tec. The contact details can be found on each page of these operating instructions. Changes to mechanical parts can only be carried out by SEVA-tec or with its consent. The warranty will be invalidated if changes are made without consent.

11- Disposal

If your product is no longer of use and you wish to dispose of it, refer to the instructions here. If you have any questions regarding ecological disposal methods, please consult our service points given on the backside of this manual.

11.1- Disposal of Oil

-Lubricants (oil and greases) are hazardous substances, which can contaminate soil and water. Collect drained lubricant into suitable receptacles and dispose of it according to the valid national guidlines.

11.2-Disposal of the Seals

Remove the seal rings from the gear unit and remove oil and grease residues. Dispose the seals as composite material (metal/plastic).

11.3-Disposal of Metal

If possible, separate the gear material into iron, aluminium and other materials. Dispose of it according to the valid national guidelines.