ANTRIEBSTECHNIK
SEVA TEC
ENERGIEANLAGEN

Operating Instructions
Parallel Shaft Gear Motors
Series D

Content

1- How To Use This Manual 04

2- Unit Designati 05
2.1 Detailed unit designation 05
2.2 Nameplate unit designation 06

3-Parts List of Standard Type Gear Units 07
3.1 D...00... Type 07
3.2 D...01... Type 08
3.3 D...02... Type- 09
3.4 D...03... Type 10
3.5 D...0S...Type 11
3.6 D...0E... Type 12
3.7 D..4 Additional Stage 13
3.8 D..5 and D..6 Additional Stages 14
3.9 D Series Motor Flange for Direct Coupled Types 15
3.10 DN..., DV...Types B5, B14 Motor Flange 15
3.11 DT... Types Input Bearing Housing with Solid Input Shaft 16

4- Safety 17
4.1 Intended Use 17
4.2 Improper Use 17
4.3 Safety Instructions 18
4.3.1 General Safety Instructions 18
4.3.1.1 Working on the gear unit 18
4.3.1.2 Operation 18
4.3.1.3 Maintenance 18
4.3.1.4 Lubricant 18
4.3.1.5 Ambient Conditions 18
4.4 Tightening Torques 19
4.5 In Case of Fire 19
4.5.1 Suitable extinguishing agents, protective equipment 19
4.5.2 Unsuitable extinguishing agents 19

5- Instructions to be Observed before Mounting the Gear Unit 20
5.1 Transportation 20
5.2 Storage 21

6- Installing The Gear Un 21
6.1 Before you start 21
6.2 Check the shaft dimensions to fit 22
6.3 Check the ambient temperature 22
6.4 Check the voltage supply 22
6.5 Check the mounting position 25
6.6 Use of breather plug 25
6.7 Check the oil level 25
6.8 Check shaft ends and mounting faces 25
6.9 Cover abrasive ambient 25
6.10 Check accessibility to filling, breather and drain plugs 26

Content

7- Mechanical Installation 26
7.1 Installing customer shaft with shoulder 27
7.2 Installing customer shaft without shoulder 28
7.3 Disassembling customer shaft with shoulder 29
7.4 Disassembling customer shaft without shoulder 30
7.5 Shaft tightening torques 31
7.6 Recommended shaft dimensions and disassembling nut dimensions 32
7.7 Dimensions of Splined Hollow Shaft to DIN 5480 33
7.8 Assembling customer shaft with shrink disk 34
7.9 Disassembling customer shaft with shrink disk 36
7.10 Assembling gear unit with torque arm 37
7.11 Fitting output shaft elements 40
7.12 Correct position of output shaft elements 40
7.13 Fitting couplings 41

8- Maintenance & Inspections 42

9- Lubrication 43
9.1 Oil types 43
9.2 Changing the oil 44
9.3 Mounting Positions 45
9.4 Oil Plugs and Oil Quantities 46

10- roubleshooting Guide 49

11- Disposal 52
11.1 Disposal of oil 52
11.2 Disposal of the seals 52
11.3 Disposal of metal 52

1- How To Use This Manual

Please pay attention to the following safety and warning instructions.

Electrical Hazard ; Can cause severe or fatal injuries.

Mechanical Hazard; Can cause severe or fatal injuries.

Likely to be Hazardous; Can cause minor or fatal injuries.

STOP

Damage Risk; Can damage gearbox or environment.

Important Information.

EC Machinery Directive:
Within terms of the EC machinery directive 2006/42/EC, the gearboxes are not considered as autonomous machines.
Operation is prohibited within the area of validity of the EC directive, until it has been determined that the machine, in which this product is installed, corresponds to the regula-tions within this directive.

The operating instructions contain important information to ensure;
- Trouble-free operation
- Fulfilment of any rights to claim under guarantee

The operating instruction must be kept close to the gearbox and must be available in case it is needed.

This operating instruction is written for D series gear units and is applicable only for D series. If any different type of gearbox is used please ask SEVA-tec GmbH for the operating instructions of that type.

This instruction can be used only for standard type geared units of SEVA-tec GmbH. For special application and modified gear units ask SEVA-tec GmbH for validity.

This manual does not cover 94/9/EC compatible gearboxes. For 94/9/EC contact SEVA-tec GmbH.

2- Unit Designation

2.1- Detailed unit designation

The detailed type designation is listed below (The name plate can be found on the next page)

D R 4 7 4 .02 3 E90S / 4C - L02

Brake
L-220V With Fan
P-24V With Fan
S-220 V Without Fan
Z-24 V Without Fan

01-10 Nm **10**-100 Nm
02-25 Nm **20**-200 Nm
04-40 Nm **30**-300 Nm
05-50 Nm **40**-400 Nm

Number of poles

Motor Size
For DR / DV Types
E90S / 4
Pole Number
Frame Lenght
Motor size
Motor type

For DN Types

A06 :63 B5	**A09** : 90 B5	**A13**:132 B5	**A25**: 250 B5
B06 :63 B14	**B09** : 90 B14	**B13**:132 B14	**A28**: 280 B5
A07 :71 B5	**A10** :100 B5	**A16**:160 B5	**A31**: 315 B5
B07 :71 B14	**B10** :100 B14	**A18**:180 B5	
A08 :80 B5	**A11** :112 B5	**A20**:200 B5	
B08 :80 B14	**B11** :112 B14	**A22**:225 B5	

Motor Efficiency Class

Output Shaft
00 :Hollow Shaft output
01 :Solid Shaft Output
02 :Solid shaft output with IEC B5 /14 Flange
03 :Flanged and Hollow Shaft output
0S :Shrink Disk Output
0E :Extruder Output

Stage
2 Stages
3 Stages 5 Stages
4 Stages 6 Stages

Revision Number

Housing Size
1...9

Input Type
R :With Motor
N :IEC B5 / B14 Flanged without Motor
V :IEC B5 / B14 Flanged with Motor
T :Without Motor

Gearbox Type
D Serie

2.2- Nameplate, unit designation

Name plate unit designation is a short abbreviation of the detailed designation

A sample name plate for D Series

SEVA-tec GmbH
www.seva-tec.de

Type:	DR473.03-90L/4		
Serial N.:	100524545		
Power:	1.5 kW	Ratio:	121,49
Speed:	12 rpm.	M. Pos.:	M1
Oil:	ISO VG320 (Mineral Oil)	Oil Qty :	6.4 lt.

Abreviations:
Serial N. : Serial Number
M.Pos. : Mounting Position

Type Designation;

DR473 - 3E71M/4C
Type Motor Size

DR- *With motor*
DT- *With input shaft*
DV- *With Motor and IEC Flange*
DN- *IEC Flange without Motor*

3- Part List of Standard Type Gear Units
3.1- D..00... Types for 2 and 3 Staged Gear Units

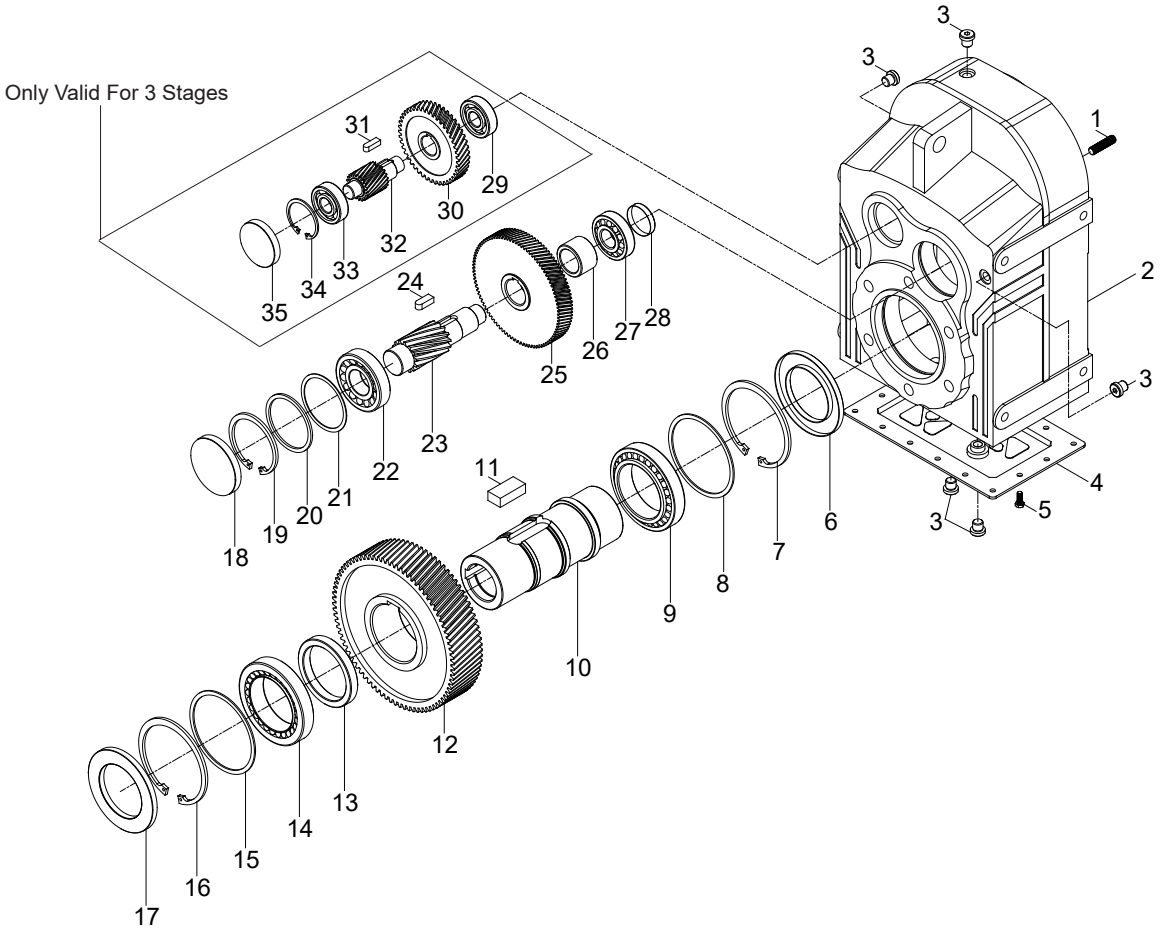

Standard D...00... type basic part diagram. Parts may differ for special applications.

Standard Part List

1- Pin Screw	9- Bearing	17- Seal	25- Gear	33- Bearing
2- Housing	10- Hollow Shaft	18- Closing Cap	26- Spacer	34- Circlip
3- Plug	11- Key	19- Circlip	27- Bearing	35- Closing Cap
4- Cover Plate	12- Gear	20- Spacer	28- Spacer	
5- Screw	13- Spacer	21- Spacer	29- Bearing	
6- Oil Seal	14- Bearing	22- Bearing	30- Gear	
7- Circlip	15- Spacer	23- Shaft Gear	31- Key	
8- Spacer	16- Circlip	24- Key	32- Gear	

3.2- D..01... Types for 2 and 3 Staged Gear Units

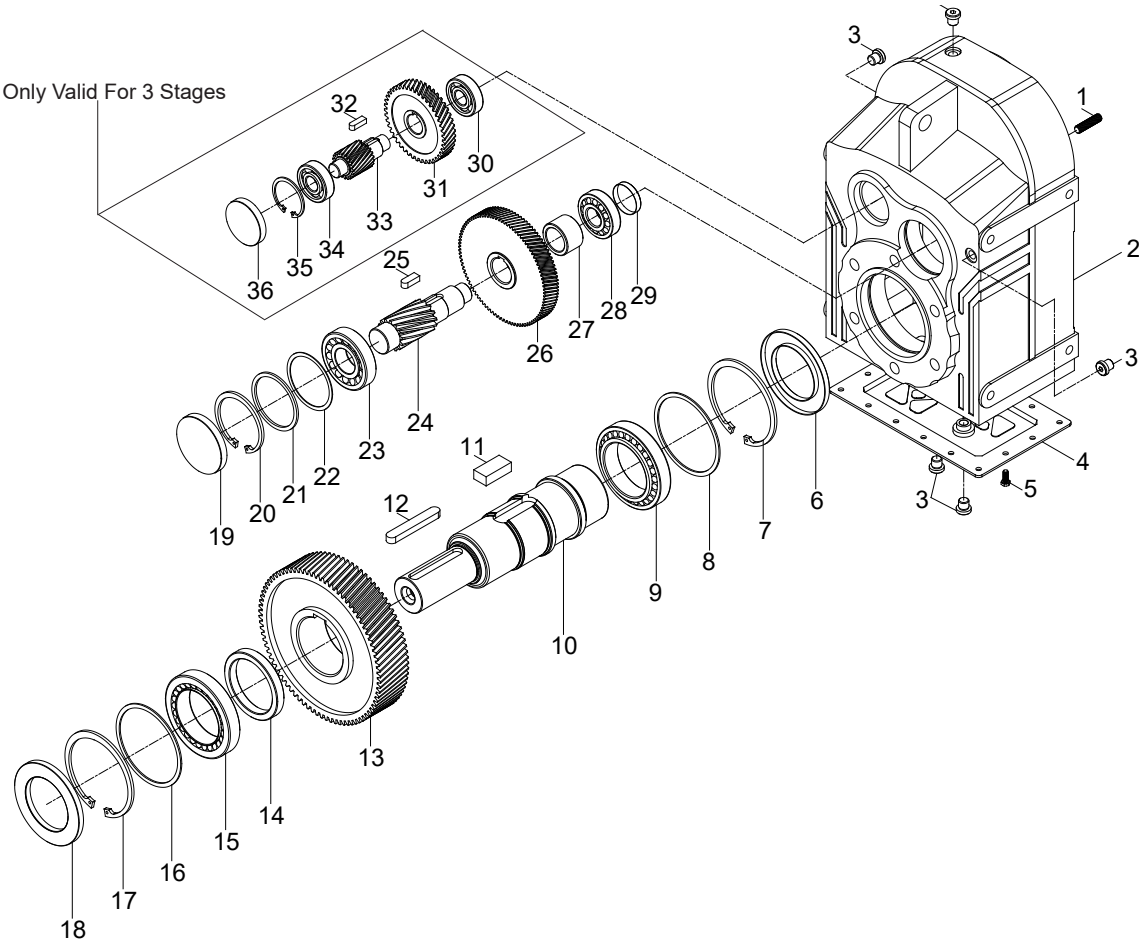

Standard D...01... type basic part diagram. Parts may differ for special applications.

Standard Part List

1- Pin Screw	9- Bearing	17- Circlip	25- Key	33- Shaft Gear
2- Housing	10- Output Shaft	18- Oil Seal	26- Gear	34- Bearing
3- Plug	11- Key	19- Closing Cap	27- Spacer	35- Circlip
4- Cover Plate	12- Key	20- Circlip	28- Bearing	36- Closing Cap
5- Bolt	13- Gear	21- Spacer	29- Spacer	
6- Oil Seal	14- Spacer	22- Spacer	30- Bearing	
7- Circlip	15- Bearing	23- Bearing	31- Gear	
8- Bearing	16- Spacer	24- Shaft Gear	32- Key	

3.3- D..02... Types For 2 and 3 Staged Gear Units

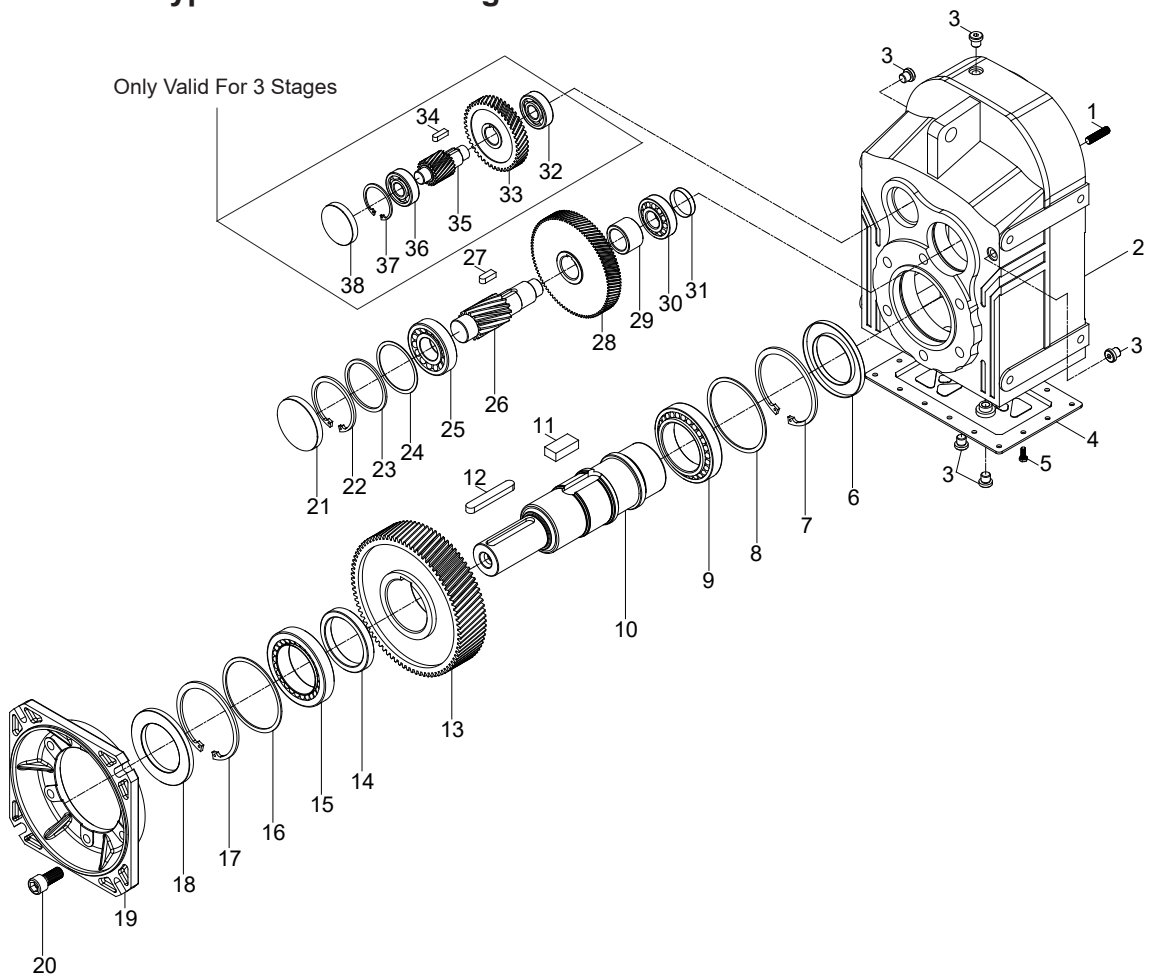

Standard D...02... type basic part diagram. Parts may differ for special applications.

Standard Part List

1- Pin Screw	10- Solid Shaft	19- Flange	28- Gear	37- Circlips
2- Housing	11- Key	20- Bolt	29- Spacer	38- Closing Cap
3- Plug	12- Key	21- Closing Cap	30- Bearing	
4- Cover Plate	13- Gear	22- Circlip	31- Spacer	
5- Bolt	14- Spacer	23- Spacer	32- Bearing	
6- Oil Seal	15- Bearing	24- Spacer	33- Gear	
7- Circlip	16- Spacer	25- Bearing	34- Key	
8- Spacer	17- Circlip	26- Shaft Gear	35- Shaft Gear	
9- Bearing	18- Seal	27- Key	36- Bearing	

3.4- D..03... Types For 2 and 3 Staged Gear Units

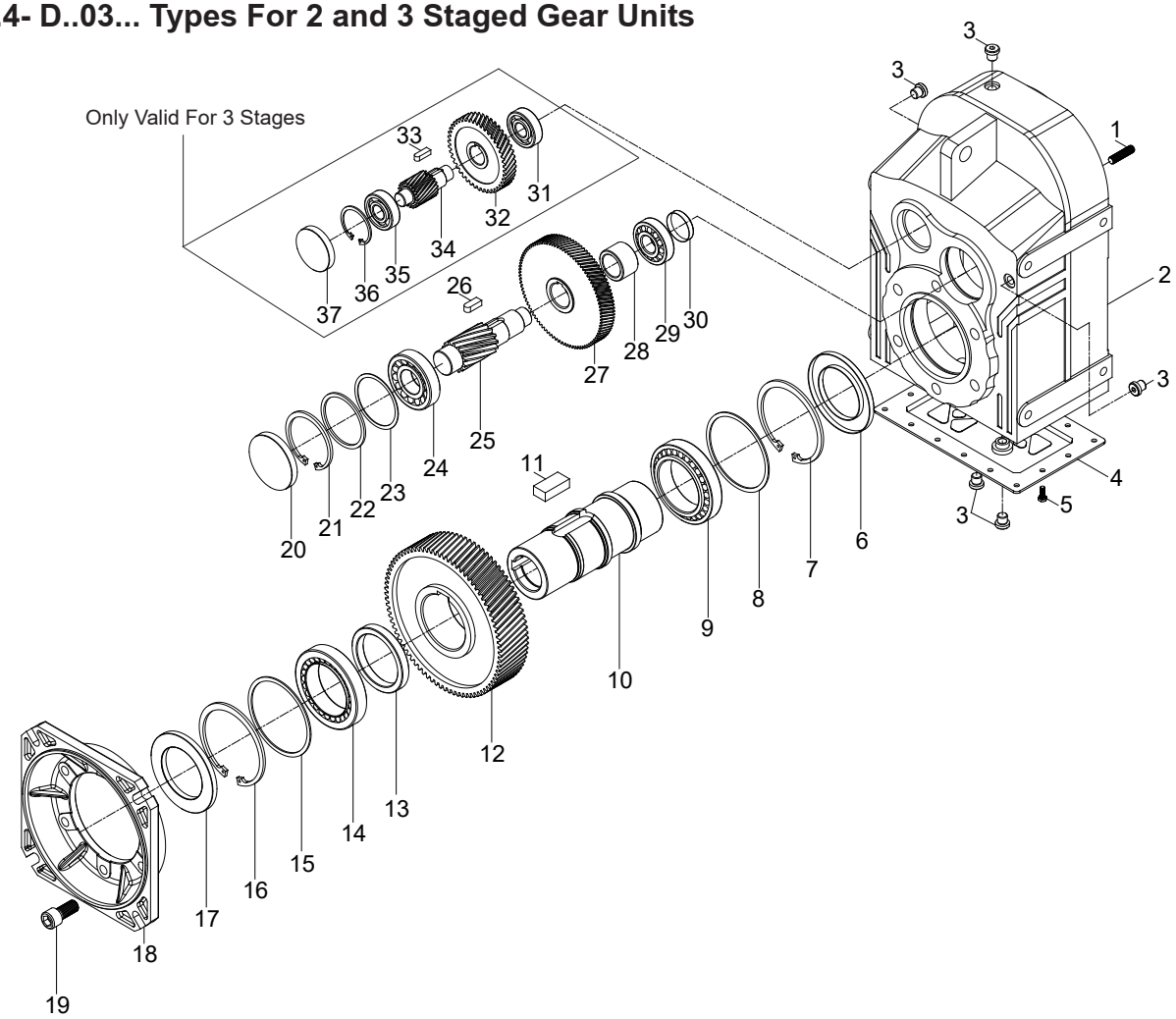

Standard D...03... type basic part diagram. Parts may differ for special applications.

Standard Part List

1- Pin Screw	9- Bearing	17- Oil Seal	25- Shaft Gear	33- Key
2- Housing	10- Hollow Output Shaft	18- Flange	26- Key	34- Gear
3- Plug	11- Key	19- Bolt	27- Gear	35- Bearing
4- Cover Plate	12- Gear	20- Closing Cap	28- Spacer	36- Circlip
5- Bolt	13- Spacer	21- Circlip	29- Bearing	37- Closing Cap
6- Oil Seal	14- Bearing	22- Spacer	30- Spacer	
7- Circlip	15- Spacer	23- Spacer	31- Bearing	
8- Spacer	16- Circlip	24- Bearing	32- Gear	

3.5- D...0S... Types For 2 and 3 Staged Gear Units

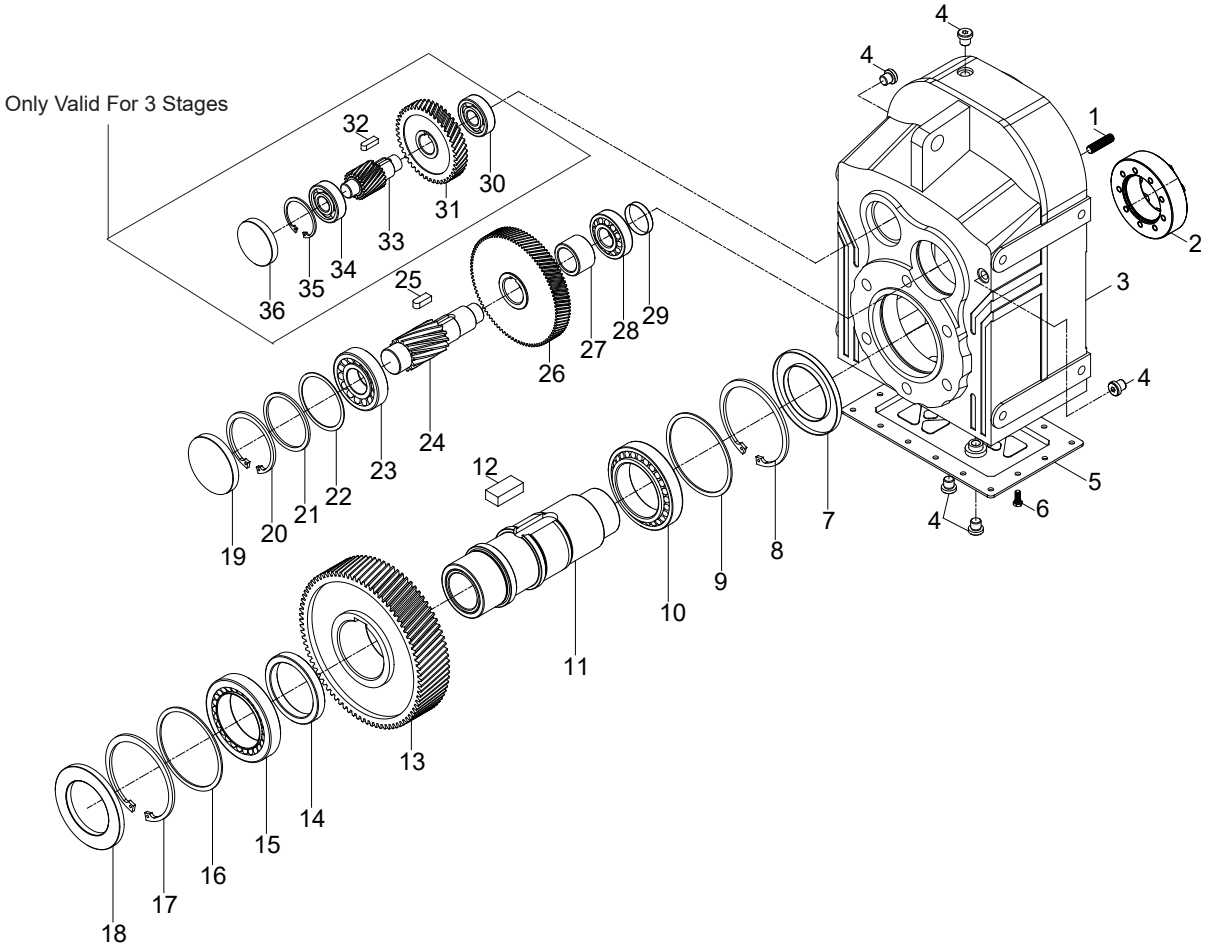

Standard D...0S... type basic part diagram. Parts may differ for special applications.

Standard Part List

1- Pin Screw	9- Spacer	17- Circlip	25- Key	33- Shaft Gear
2- Shrink Disk	10- Bearing	18- Oil Seal	26- Gear	34- Bearing
3- Housing	11- Output shaft	19- Closing Cap	27- Spacer	35- Circlip
4- Plug	12- Key	20- Circlip	28- Bearing	36- Closing Cap
5- Cover Plate	13- Gear	21- Spacer	29- Spacer	
6- Bolt	14- Spacer	22- Spacer	30- Bearing	
7- Oil Seal	15- Bearing	23- Bearing	31- Gear	
8- Circlip	16- Spacer	24- Shaft Gear	32- Key	

3.6- D...0E... Types For 3 Staged Gear Units

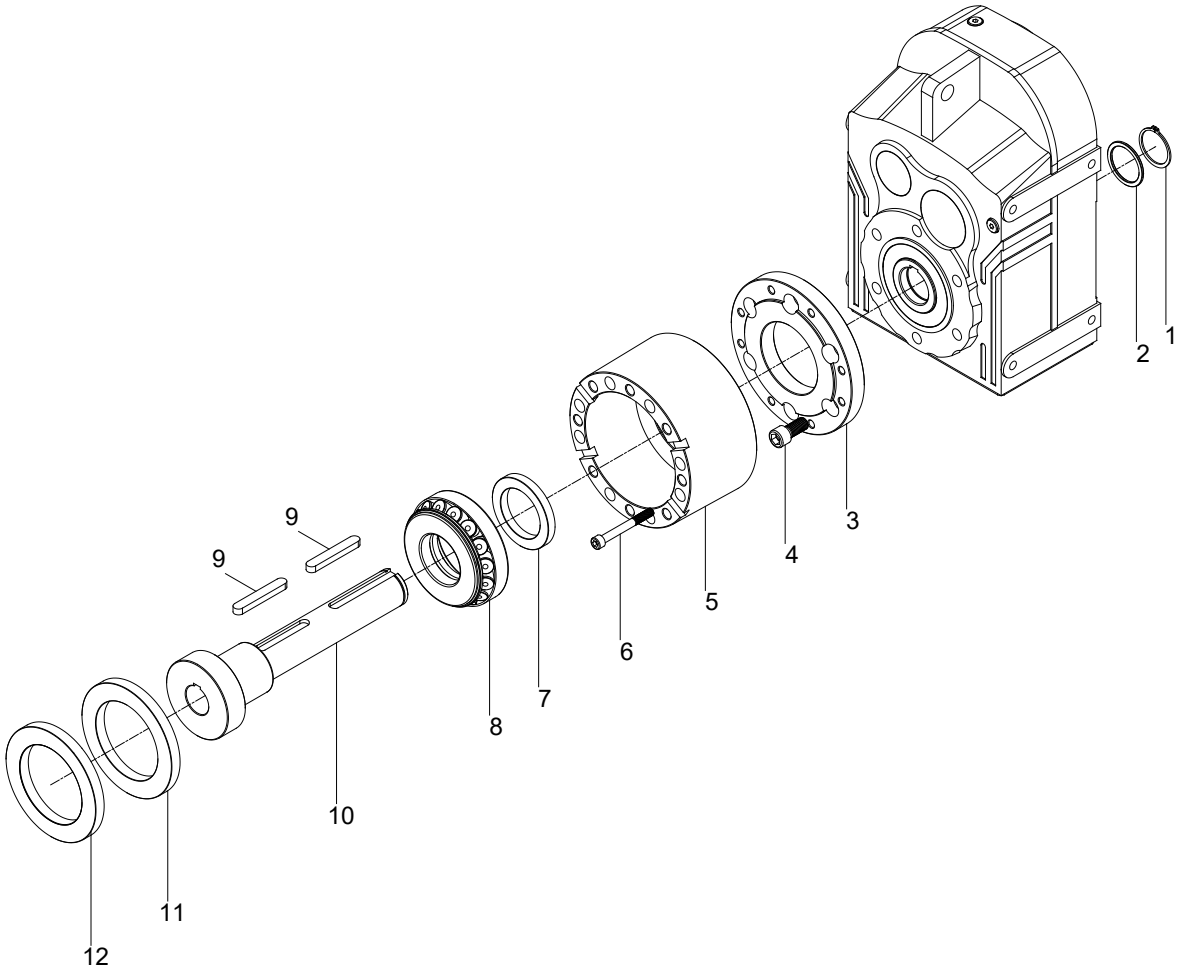

Standard D...0E... type basic part diagram. Parts may differ for special applications.

Standard Part List

1- Circlip	5- Extruder Neck	9- Key
2- Spacer	6- Bolt	10- Hollow Shaft Output
3- Flange	7- Seal	11- Spacer
4- Bolt	8- Bearing	12- Seal

3.7- D..4 Series Additional Stage for 4 Stage Types

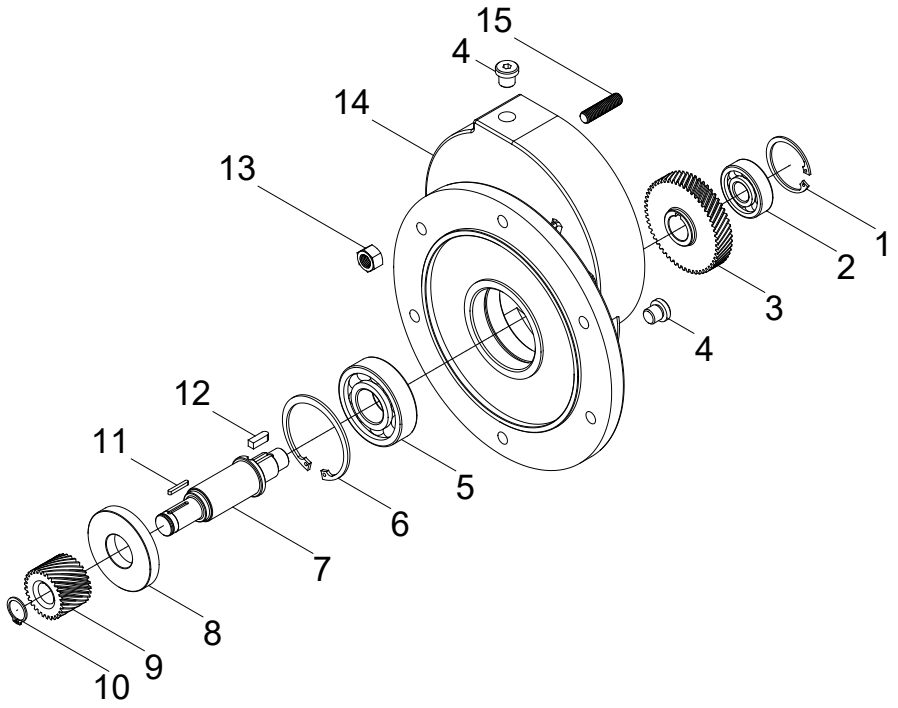

Standard D..4 type additional stage basic part diagram. Parts may differ for special applications.

Parts List

1- Circlips	6- Circlips	11- Key
2- Bearing	7- Shaft	12- Key
3- Gear	8- Seal	13- Bolt
4- Oil plug	9- Gear	14- Additional Housing
5- Bearing	10- Circlips	15- Screw Pin

3.8- D Series 5-6 Stages Types

N Type 2 and 3 stages are additional housing of D series 5 stages and 6 stages of gear units.

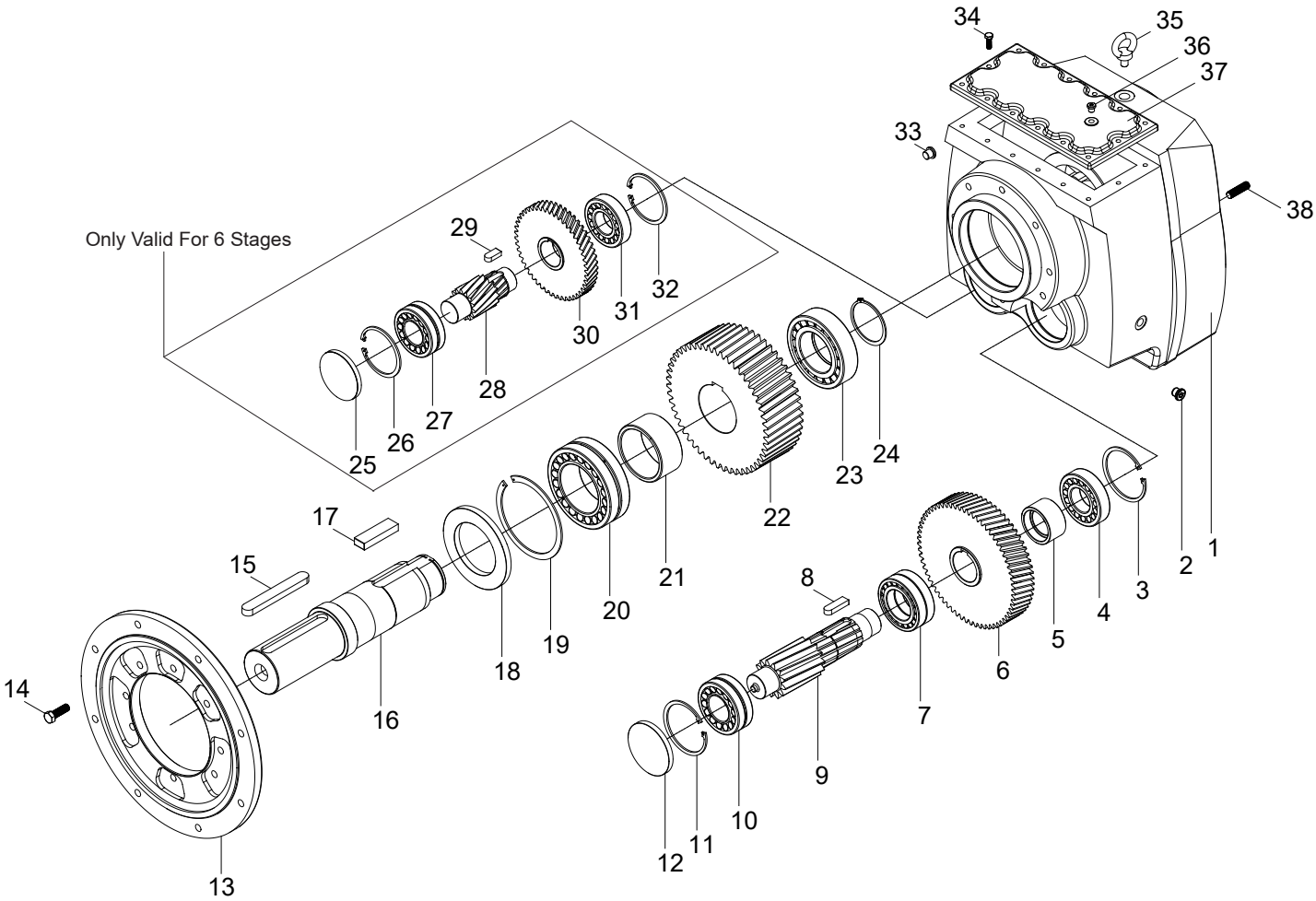

Standard N type 3 stages basic part diagram. Parts may differ for special applications.

Parts List

1- Housing	9- Gear	17- Key	25- Cover	33- Oil plug
2- Oil plug	10- Bearing	18- Seal	26- Circlips	34- Bolt
3- Circlips	11- Circlips	19- Circlips	27- Bearing	35- Eye bolt
4- Bearing	12- Cover	20- Bearing	28- Gear	36- Oil plug
5- Spacer	13- Output Flange	21- Spacer	29- Key	37- Top side cover
6- Gear	14- Bolt	22- Gear	30- Gear	38- Screw Pin
7- Bearing	15- Key	23- Bearing	31- Bearing	
8- Key	16- Output Shaft	24- Circlips	32- Circlips	

3.9- D-series Parts List with Motor Flange for a Direct Motor Connection

Parts List

1- Shaft	6- Key
2- Circlips	7- Gear
3- Bearing	8- Circlips
4- Circlips	9- Nut
5- Flange	10- Key

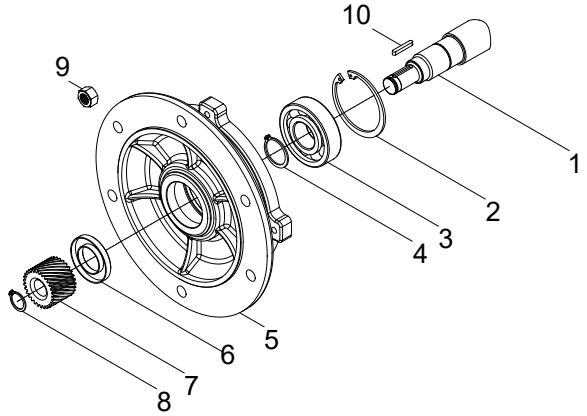

3.10- Parts List for B5/ B14- Motor Flange of Types DN... and DV...

Parts List

1- Shaft	6- Seal
2- Circlips	7- Gear
3- Bearing	8- Circlips
4- Circlips	9- Nut
5- B5 / B14 Flange	10- Key

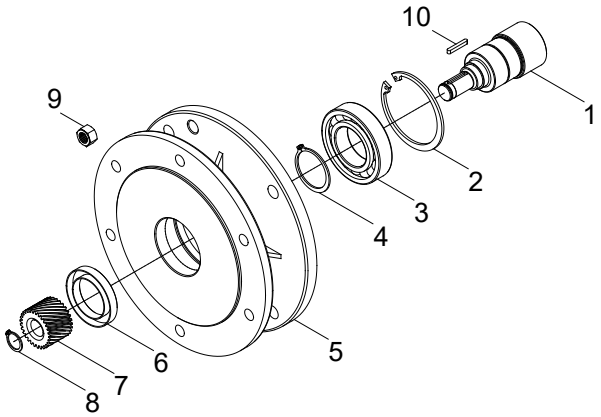

3.11- Parts List for the Flange Connection Assembly of the DT... Series without Motor

Parts List

1- Seal	7- Circlips
2- Nut	8- Gear
3- Flange	9- Circlips
4- Shaft	10- Key
5- Bearing	11- Key
6- Bearing	

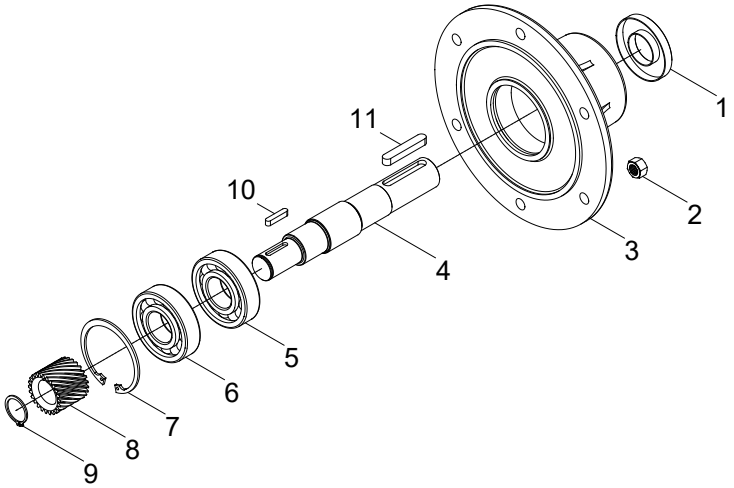

4- Safety

4.1- Intended Use

These gear units are designed for industrial use. Please refer to our catalogue or our web page for the maximum permitted torques and speeds. The most important maxi-mum permitted values are indicated on the nameplate of the product. The complete information can be found in our product catalogue. Using the product out of the product catalogue / nameplate's permitted ranges will cancel the warranty/manufacturer declaration and SEVA-tec GmbH will not take any responsibility.

The gear units are intended for industrial machines and may only be used in accordance with the information provided in this manual the product catalogue and the nameplate of the gearbox. They comply with the applicable standards and regulations and meet the requirements of the directive 2006/42/EC. The gearbox must be started up, maintained, and operated according to this manual.The gearbox most be incorporated with 2006/42/EC confirming parts/machines.

Motor installation and/or operation is only permitted if the permissible catalogue values or name plate data are not exceeded. For frequency inverter operation, the speed range can be entered on the type plate. The information must be provided when the order is placed. Without notification, only a fixed speed is entered on the name plate; a subsequent speed change is not permitted. The three-phase motor and frequency inverter must comply with directive 2006/42/EC.

If the gearboxes are to be operated with a speed controller, this must be stated when the order is requested or placed. The permissible maximum and minimum speed range is entered on the name plate. If no information is given when the order is placed, the gearbox will be delivered with a fixed speed and only this speed is permissible.

If the gearboxes are operated with a belt drive / coupling / chain drive etc., only the data on the name plate / catalogue values are permitted. Deviating speeds, higher motor outputs, higher radial/axial loads etc. are not permitted.

The ambient temperature may be between +5 and +40°C, abrasive medium must be kept away from the seals and paint. In the event of deviating operating conditions, SEVA-tec must be informed before placing the order.

4.2- Improper Use

Every usage which exceeds the limits stated above, the nameplate and catalogue of the product (especially higher torques and speeds) is not compliant with the regulations, and thus prohibited.
The operation of the gear reducer is prohibited if;

-It was not mounted/installed according to regulations and this manual
-The gear unit is very dirty
-It is operated without lubricant
-The operating data exceeds the permissible catalogue data.

4.3- Safety Instructions

4.3.1- General Safety Instructions

4.3.1.1- Working on the gear unit

- *Inappropriately executed work can lead to injury or damage.*

Make sure that the gear unit is only installed, maintained and dismantled by trained technicians.

- *Foreign bodies spinning through the air can cause grave injury.*

Before putting the gear unit into operation, check that there are no foreign bodies or tools near the gear unit.

4.3.1.2- Operation

- *Touching hot surfaces can lead to burns.*

Do not touch the gear unit if its operation temperatures are too high or use suitable safety equipment like gloves.

- *Rotating machinery can lead to injuries. There is danger of being trapped or pulled in!*

Keep sufficient distance and mount a guard in front of the rotating machine parts. See relevant norms EN349+A1, EN13857.

4.3.1.3- Maintenance

-An unintentional start of the machine during maintenance work can lead to serious accidents.

Make sure no one can start the machine while you are working on it.

- Even a brief running of the machine during maintenance work can lead to accidents if the safety devices are not operating.

Make sure that all safety devices are mounted and active.

4.3.1.4- Lubricant

- Extended, intensive contact with oils can lead to skin irritations.

Avoid extended contact with oil, and clean oil off skin thoroughly.

- Hot oil can cause scalding.

When changing oil, protect yourself against contacting hot oil.

4.3.1.5- Ambient Conditions

- Standard gearboxes are allowed to work in ambient temperatures between +5 to +40°*C* unless differently specified on the nameplate. *Using the gear unit out of this range can cause damage to the gear unit or environment. At ambient temperatures above +40°C, touching the gear unit surface can cause burns.*

STOP

- *If the gear unit will be used in outdoor applications the gear unit must be protected from rain snow and dust. Entering substances inside the gear unit from seals can damage the gear unit. Observe the safety instructions for outdoor use EN12100:2010.*

4.4- Tightening Torques

All screws with a specified tightening torque should always be tightened and checked with a calibrated torque wrench. Use the following torques for the threaded bores over the gear unit housing. For connecting elements refer to the mechani-cal installation part.

Bolt Size	Class	Tightening Torque [Nm]
M8	8.8	23
M10	8.8	43
M12	8.8	77
M16	8.8	190
M20	8.8	370
M24	8.8	640

4.5- In Case of Fire

The gear reducer itself is not combustible. However, it usually contains a synthetic or mineral gear oil.
Please observe the following if the gear unit is situated in a burning environment.

4.5.1- Suitable extinguishing agents, Protective equipment

Always keep suitable extinguishing, protective equipment like carbon dioxide, powder, foam, fog easily accessible around the gear unit.

-*High temperatures produce irritating steam.*
Use a protective breathing apparatuses.

4.5.2- Unsuitable extinguishing agents

Do not spray with water!

5- Instructions to be Observed before Mounting the Gear Unit

If gear motors are used, please also refer to the manual of the motor manufacturer.

Before installing the gear unit, please check that it has been delivered in full and check for any transportation damage. Points to take into consideration before you start to install the unit;
- You have received the correct operation manual of the your product.
- The gearbox and all its parts are transported without damage.
- The gearbox is stored correctly according the instructions in this manual
-You have the latest product catalogue or you have access to our web page

5.1- Transportation

Upon delivery of the gear unit, ensure that the delivery corresponds to the purchase contract and that there is no damage. If there is any transport damage, report it to the shipping company immediately, and inform us about the damage.

Use the supplied eyebolts or lifting holes for lifting up the gear unit. The eyebolts are capable to carry the weight of gearboxes only. Do not hang additional loads. Use suitable hoisting equipment that can hold the weight of the gear unit. Refer to the catalogue for various types weights. See drawing below for hoisting point.

Do not stay beneath / under the lifting/hoisting equipment which may cause serious injuries by falling down objects, accidental movements, unexpected accidents.

STOP

Falling or hard placement can damage the gear unit.
Only use hoisting and securing equipment which is permitted for the size / weight of your gear unit.
Ensure that the load is slowly and carefully handled and placed.

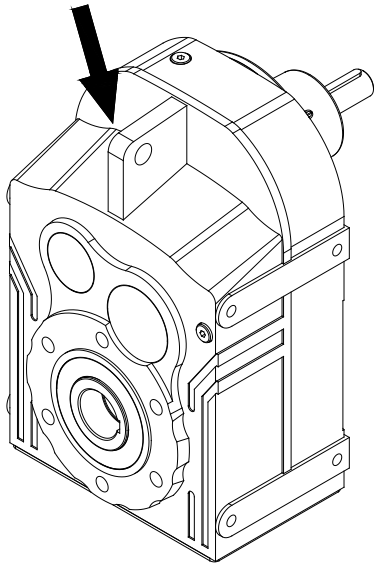

5.2- Storage

If the gear unit or gear motor will be stored up to 3 years refer to the following instructions;

With Packaging

-Use corrosion protection oil for the output shaft and connection surfaces like flange surface or foot assembling surface. Seal the unit in a plastic wrap and pack it in container. A moisture indicator should be placed around the container to observe the moisture. Relative atmospheric humidity should not exceed 50%. The container should be kept under roof which protects from snow and rain. Under these conditions, the gear unit can be stored for up to 3 years with regular checks. The ambient temperature should be between -5 to 60 ºC.

Without Packaging

-Use protection oil for the output shaft and connection surfaces like flange surface or foot assembling surface. If the packaging is used and the gearbox is stored without packaging, the ambient temperature should be between 5° to 60° Celsius. The gearbox must be kept under enclosed roof with constant temperature and constant humidity not exceeding 50%. The storage should be free of dust and dirt and ventilated with filter. If the gearbox is stored without packaging it is recommended not to store it for more than 2 years and regular checks during this time are recommended.

If stored in open protect against insect damage.

6- Installing The Gear Unit

6.1- Before you start

- Observe the gear unit for damages of storage or transportation. If any damage please contact SEVA-tec-GmbH.
- Be sure that you have all the equipment necessary for installing like; Spanners, torque wrench, shims and distance rings, fixing devices for input and output elements, lubricant, bolt adhesive etc.

- *This manual is not for 94/9/EC (ATEX) conforming gear units. For 94/9/EC conforming gear units refer to the ATEX range manual. ATEX conforming gear units have name plates indicating the zone and the temperature class and are different from standard type geared units. Therefore Standard units can not be installed on Potentially explosive atmospheres.*

6.2- Check the shaft dimensions to fit;

Type	Hollow Shaft Diameter	Hollow Shaft Tolerance (H8)	Output Shaft Diameter	Output Shaft Tolerance (DIN748) Up to 50mm k6 Over 50mm m6	Flange Centering Shoulder Diameter	Centering Shoulder Tolerance (g6)
D...072/073...	25	+0.02 0	25	+0.02 0	80	-0,01 -0,03
D...172/173...	30	+0.02 0	30	+0.02 0	80	-0,01 -0,03
D...272/273...	35	+0.03 0	35	+0.02 0	86	-0,01 -0,03
D...282/283...	40	+0.03 0	40	+0.02 0	110	-0,01 -0,03
D...372/373...	40	+0.03 0	40	+0.02 0	110	-0,01 -0,03
D...472/473...	50	+0.03 0	50	+0.02 0	130	-0,01 -0,03
D...572/573...	60	+0.03 0	60	+0.03 +0.01	180	-0,01 -0,03
D...672/673...	70	+0.03 0	70	+0.03 +0.01	180	-0,01 -0,03
D...772/773...	90	+0.04 0	90	+0.03 +0.01	230	-0,01 -0,03
D...872/873...	110	+0.04 0	110	+0.04 +0.01	250	-0,01 -0,03
D...972/973...	120	+0.04 0	120	+0.04 +0.01	300	-0,01 -0,03

6.3- Check the ambient temperature;

The ambient temperature must be between +5 ºC to +40 ºC for standard type gear units. If different contact SEVA-tec GmbH for special solutions.

6.4- Check the voltage supply;

The standard gear motors are supplied with 230/400V 50/60 Hz up to 3 kW including 3 kW and 400/690 V 50/60 Hz over 3 kW and is indicated on the motors name plate unless it is differently ordered.

If only the gear unit is supplied from SEVA-tec GmbH please observe the name plate of the electric motor and the instructions of the supplier. Check the basic electric connection diagrams below. Use experienced electric technician.

STOP *Using wrong connection or voltage can damage the electric motor or environment.*

The following wiring diagram is for standard 230/400 V 50 Hz AC electric motors. For different voltages please contact SEVA-tec GmbH. For gear units supplied without motor, refer to the motor manufacturers user manual.

STOP

The electrical installation and commissioning may only be carried out by qualified personnel. The gear unit and the motor must both be grounded separately.

Pole Number	Nominal Powers at 400V, 50Hz	
	230V (D) / 400 V (Y)	400V (D)
2 or 4	≤ 3 kW	≥ 4 kW
6	≤ 2,2 kW	≥ 3 kW
8	≤ 1,5 kW	≥ 2,2 kW
Starting Principle	Direct	Direct or Y/D

Basic motor connection wiring diagram

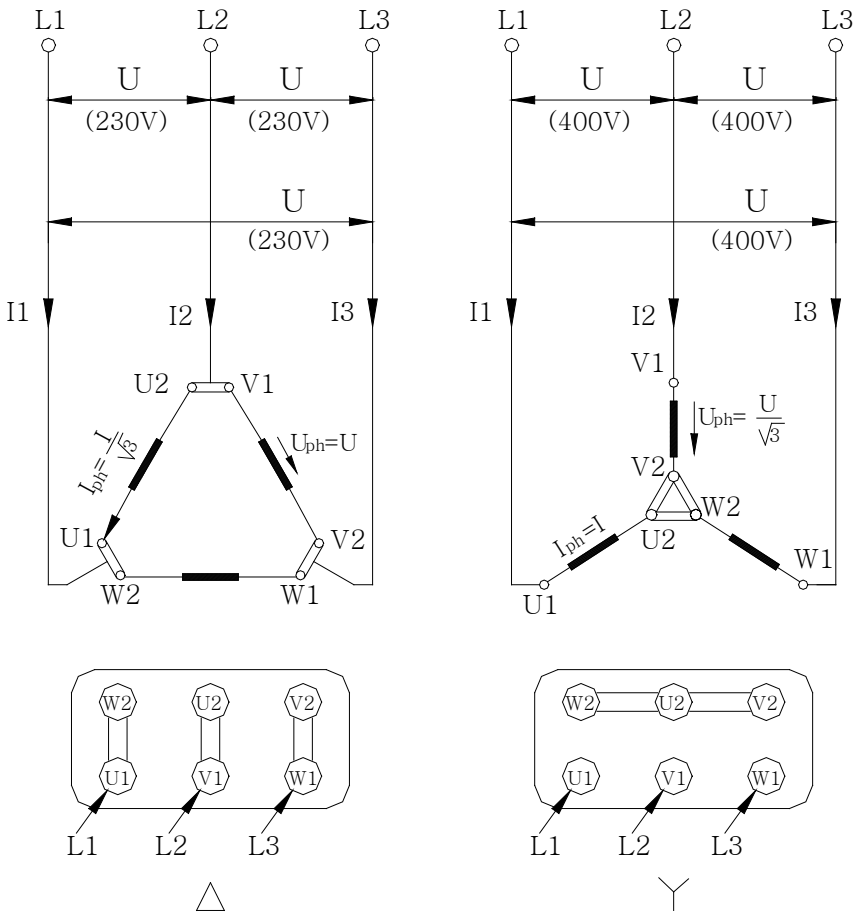

Standard Circuit Diagrams for Brake Motors

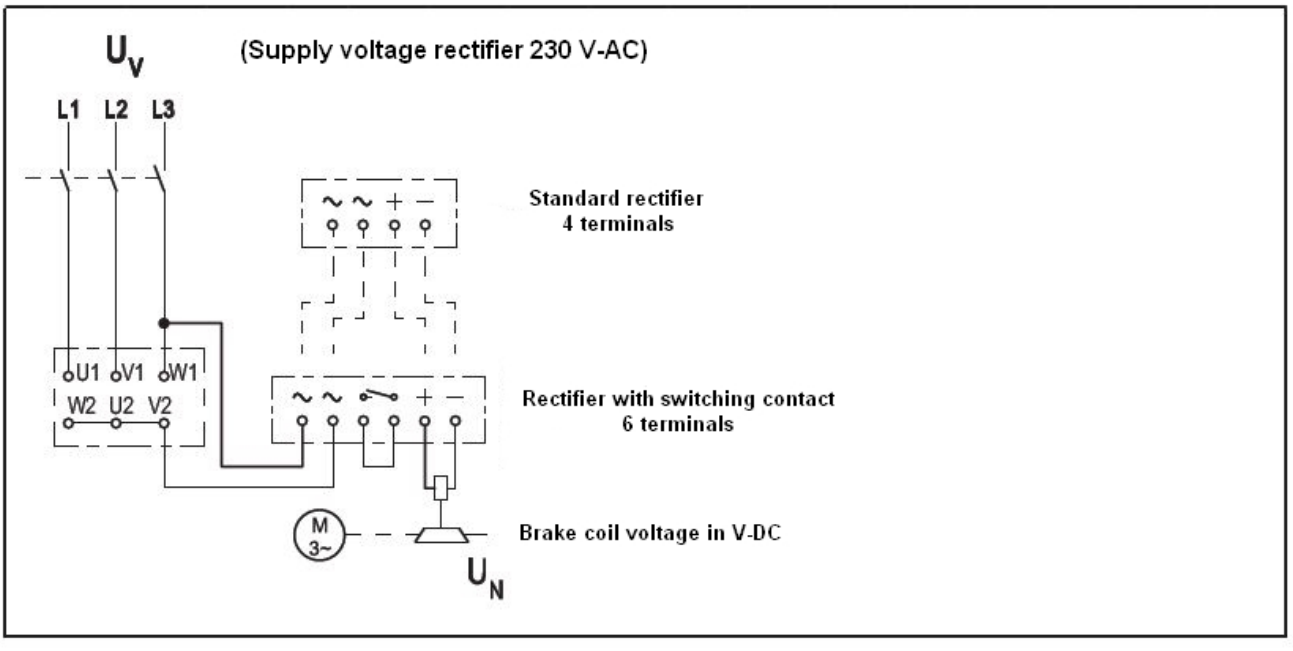

Supply: Phase-Starpoint

Bridge rectifier

U_N [VDC]=0.9 • U_V [VAC]

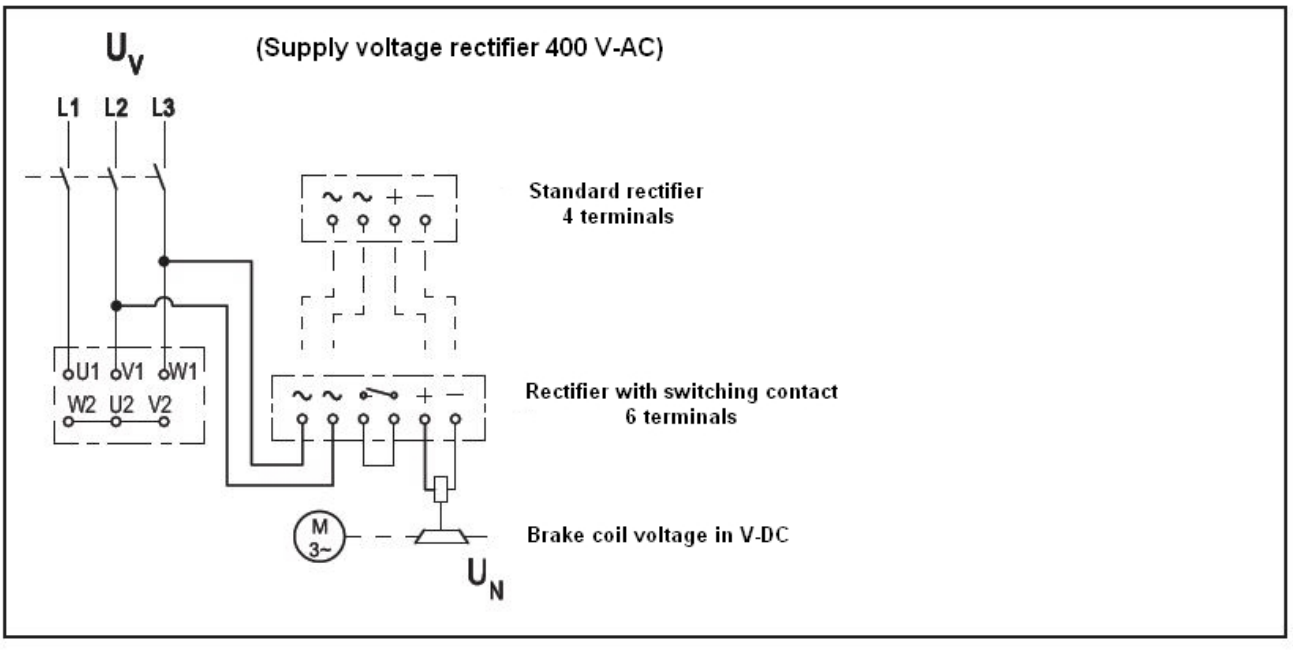

Supply: Phase-Phase

Half-wave rectifier

U_N [VDC]=0.45 • U_V [VAC]

6.5- Check the mounting position

The mounting position must be in accordance with the mounting position mentioned on the name plate. If different please contact SEVA-tec GmbH for possibilities of using in a different mounting position. Refer to the mounting positions and oil quantities on this manual and adjust the oil level accordingly with the recommended oil types given on this manuel.

STOP *Do not mix synthetic oils with mineral oils which can cause serious damage on the gear unit.*

6.6- Use of breather plug

Breather plugs are recommended by SEVA-tec for heavy ambient conditions and long working hours. They will be delivered together with the gearbox and must replace the plug located at the highest gearbox position after gearbox disassembly and before start-up.

Not all possible screw plug threads are machined. If no mounting position is specified in the order, the delivery is made in the standard "M1" position. Only the threads for the desired mounting position are then machined. .

6.7- Check the oil level

Please refer to the installation position table and make sure that the oil level is correct according to the installation position. If the oil level is below the correct filling level, please take a wire to check. The oil level may be max. 3mm below the correct filling level. Please make sure that you use the correct oil. The required oil fill quantity and oil viscosity can also be found on the name plate.

STOP *Do not mix synthetic oils with mineral which can cause serious damage on the gear unit.*

6.8- Check shaft ends and mounting faces

Before starting assembly, make sure that the fasteners are free of dirt and oil. The output shafts are coated with anti-corrosion oil. Remove it with a commercially available solvent. It is essential to avoid solvent coming into contact with the sealing ring lips and the housing paint.

6.9- Cover abrasive ambient

If the gear motor is to be used in a dirty and abrasive environment, make sure that the shaft seals are protected against abrasive agents as well as chemical products and chemical liquids. Please protect the gearboxes and shaft seals from additional overpressure, which can cause protective particles (solid and liquid) to enter the gearbox via the shaft seal and destroy the gearbox. If gear motors cannot be protected against overpressure and abrasive dirt particles, please contact SEVA-tec.

STOP *Abrasive material, chemicals, water, positive or negative pressure exceeding 0,2 bar can affect or damage the sealing lip or output shaft. Inside entering substances from the seals can cause serious damage to the gear unit.*

6.10- Check accessibility to filling, breather and drain plugs
The oil filler, breather and exhaust plugs must be freely accessible for subsequent service work.

7- Mechanical Installation
The gear unit can only be installed using the supplied connection points like foot and flange assembling points.

To install the gear unit without the supplied connection points can cause serious injuries by loosening or braking the gear unit. Even the gear unit is installed totally correctly according this manual, be sure that no one will be harmed by accidentally brake downs or loosening.

Please ensure that the gearbox mountings are stable to prevent vibration and that it can be mounted on a machined surface without distortion. When using chain drives, this is especially important because of the polygon effect. If load shocks, prolonged overloads or blockages are likely to occur, install appropriate protective elements such as hydraulic clutches, etc. Check the radial and axial loads that occur. These must not exceed the permissible values. Take the permissible values from the product catalogue.

STOP

If the output or input shaft is overloaded by radial or axial loads it can cause serious damage to the gear unit.

Secure the gear unit using 8.8 or higher quality bolts.

Protect all rotating parts from possible contact. Rotating machine parts can lead to serious injuries.

For different kind of basic installations refer to the following illustrations.

7.1- Installing customer shaft with shoulder

7.1.1- Use a commercially available mounting paste.

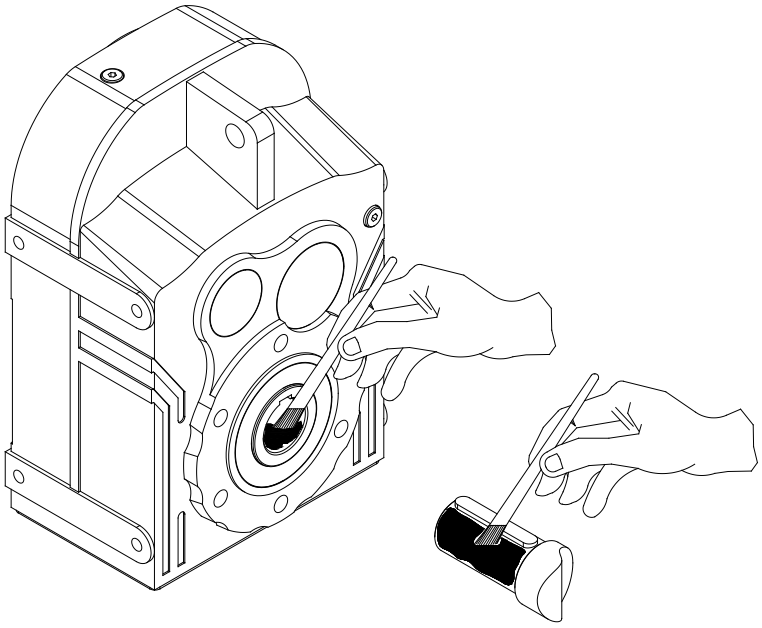

7.1.2 -Fasten the bold as shown below.

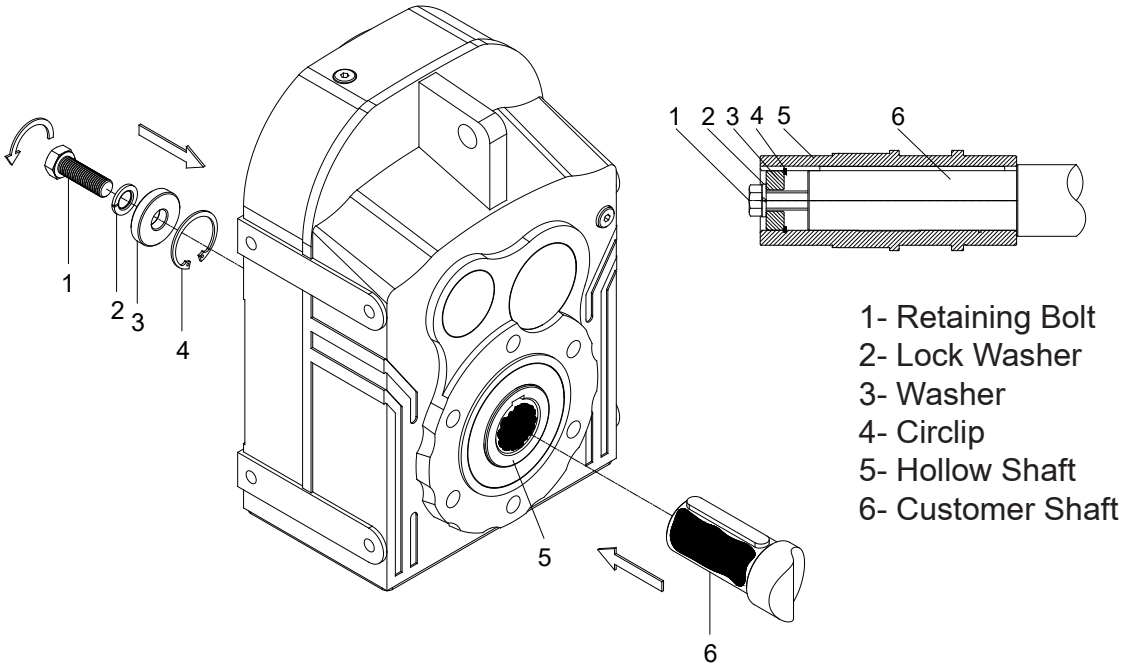

7.2- Installing customer shaft without shoulder

7.2.1- Use a commercially available mounting paste.

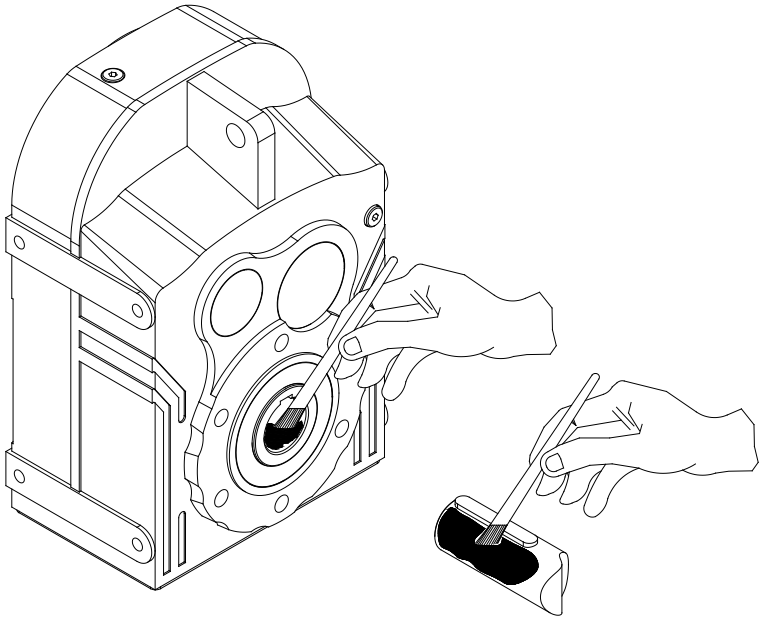

7.2.2- Fasten the bold as shown below.

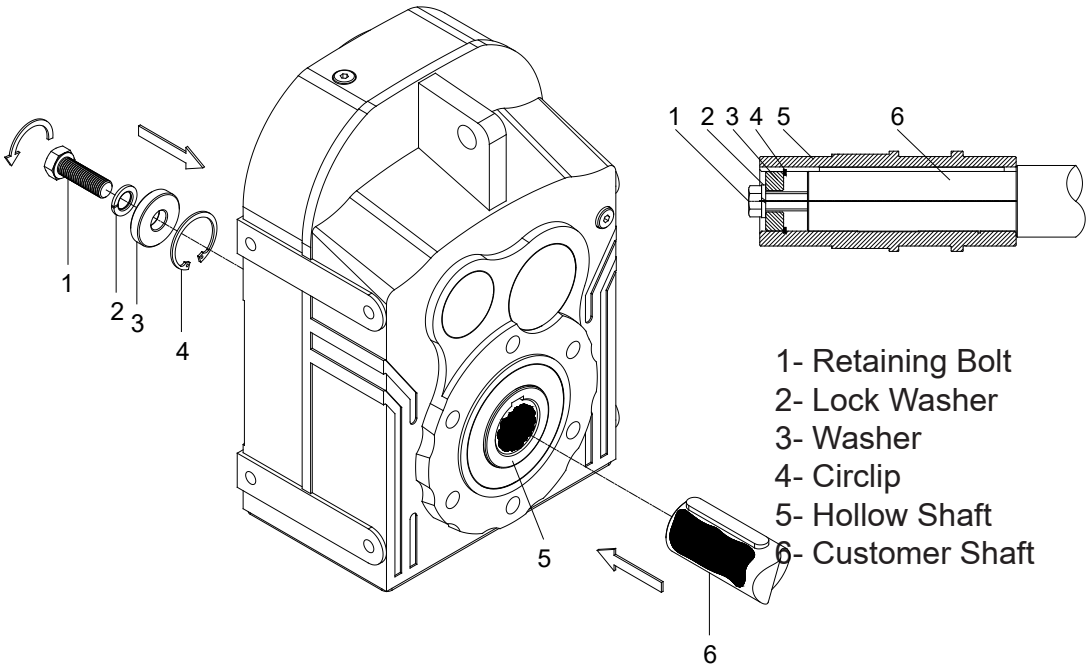

7.3- Disassembling customer shaft with shoulder

7.3.1- Disassemble the bolt and take out the parts as shown

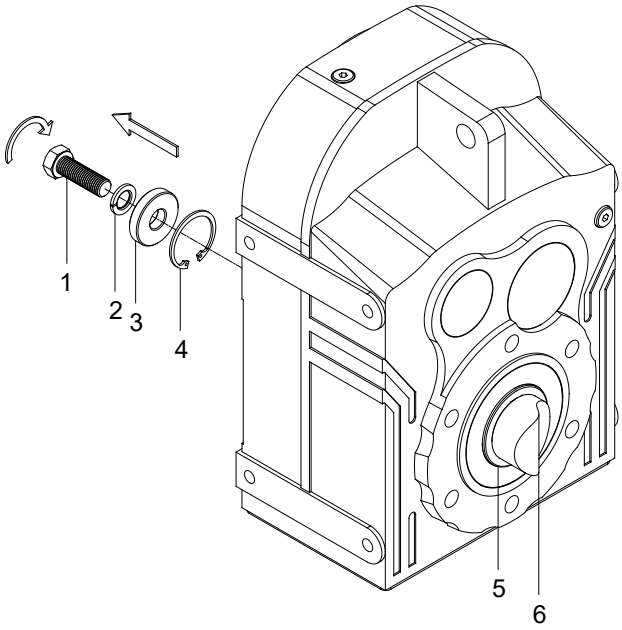

7.3.2- Use the disassembling set from SEVA-tec GmbH and fasten the bolt as shown below to take out the output shaft. Check the following pages for disassembling kits.

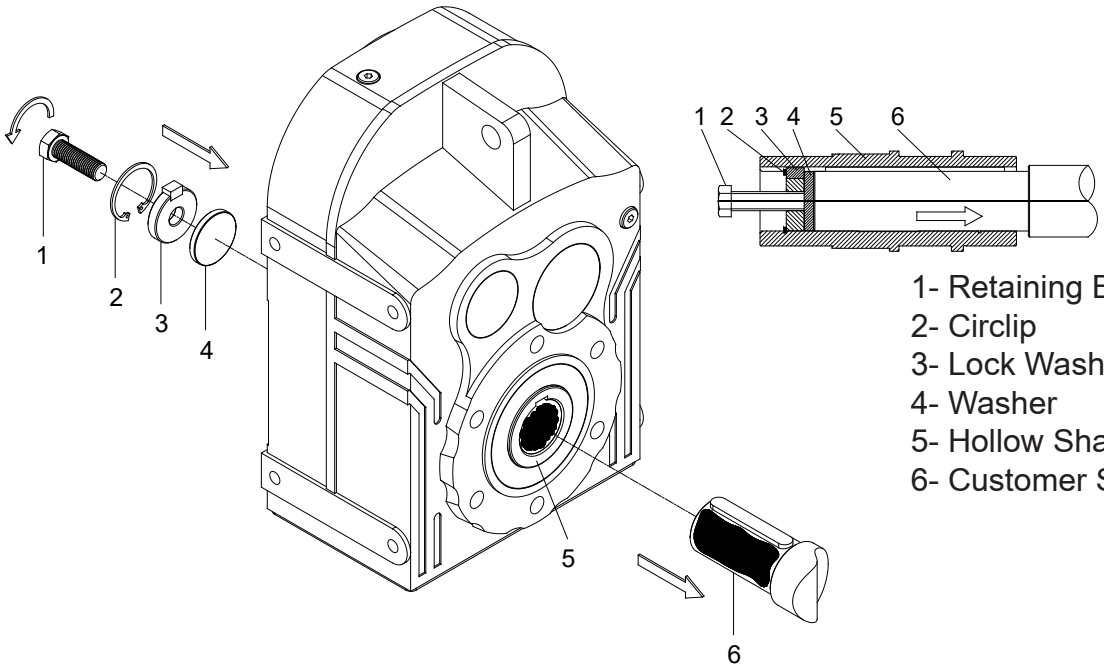

1- Retaining Bolt
2- Circlip
3- Lock Washer
4- Washer
5- Hollow Shaft
6- Customer Shaft

7.4- Disassembling customer shaft without shoulder

7.4.1- Disassemble the bolt and take out the parts as shown.

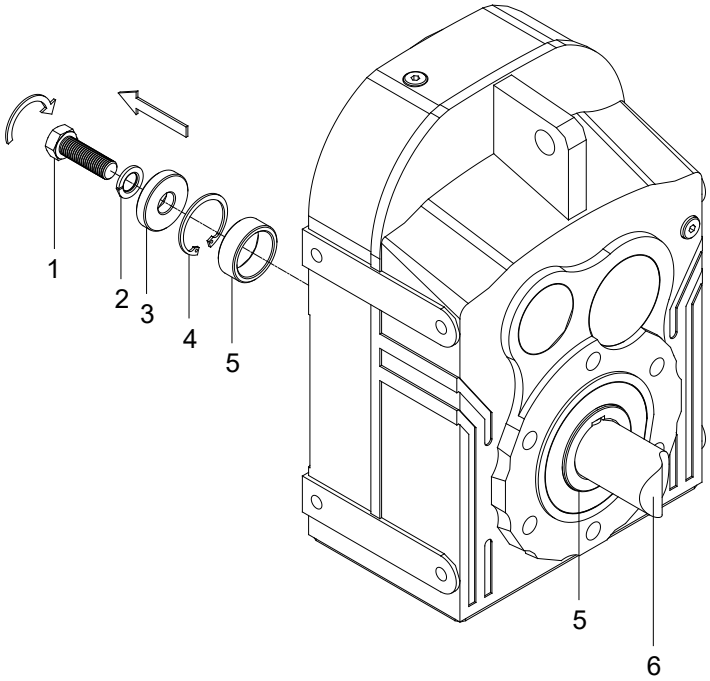

7.4.2 -Use the disassembling set from SEVA-tec GmbH and fasten the bolt as shown below to take out the output shaft. Check the following pages for disassembling kits.

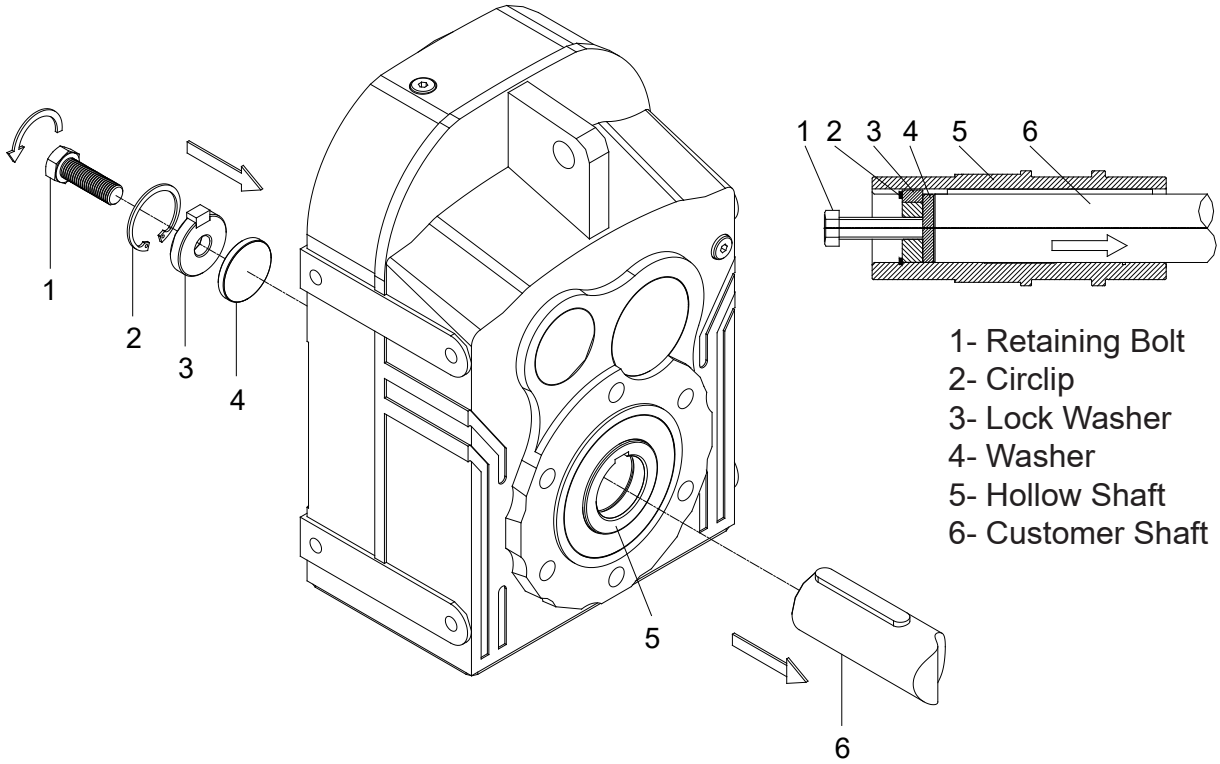

7.5- Shaft tightening torques

Use the following table for shaft tightening torques.

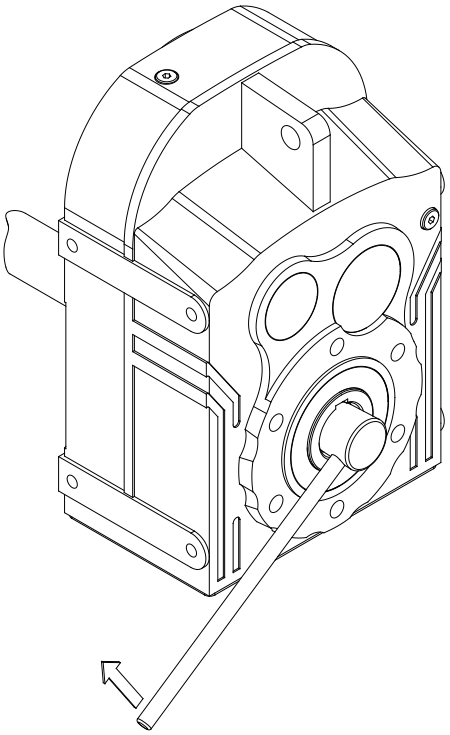

Type	Bolt	Tightening Torque [Nm]
D.072/073	M10	20
D.172/173	M10	20
D.272/273	M12	20
D.282/283	M16	40
D.372/373	M16	40
D.472/473	M16	40
D.572/573	M20	80
D.672/673	M20	80
D.772/773	M24	200
D.872/873	M24	200
D.972/973	M24	200

7.6- Recommended shaft dimensions and disassembling nut dimensions

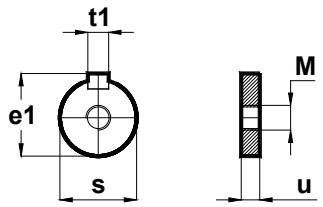

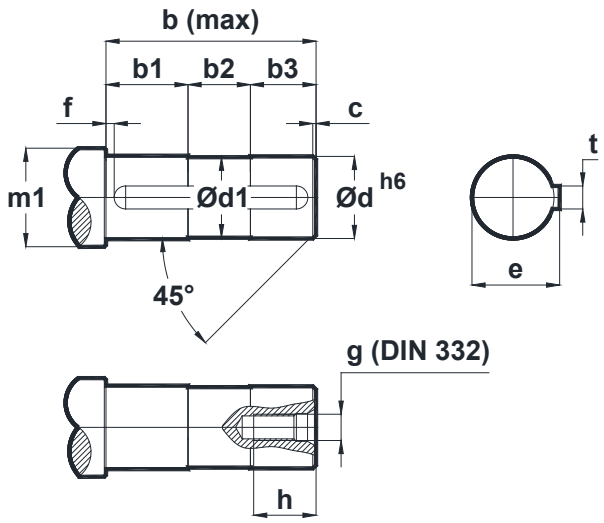

Type	s	u	e1	t1	M	d	d1	m1	f	b	b1	b2	b3	c	g	h	e	t
D.07..	24.7	8	28	7.5	M12	25	24	30		82	45	18	19	1	M10	24	28	8
D.17..	29.7	10	33	7.5	M12	30	29	36		89	50	20	19	1	M10	24	33	8
D.27..	34.7	12	38	9.5	M16	35	34	43		114	65	27	22	1	M12	30	38	10
D.28..	39.7	12	43	11.5	M20	40	39	50		124	69	28	27	2	M16	38	43	12
D.37..	39.7	12	43	11.5	M20	40	39	50		138	75	35	28	2	M16	38	43	12
D.47..	49.7	12	53.5	13.5	M20	50	49	60	5	165	87	41	37	3	M16	38	53.5	14
D.57..	59.7	16	64	17.5	M24	60	59	75		188	101	44	43	3	M20	44	64	18
D.67..	69.7	16	74.5	19.5	M24	70	69	85		248	115	78	55	4	M20	44	74.5	20
D.77..	89.7	20	95	24.5	M30	90	89	110		287	140	83	64	4	M24	52	95	25
D.87..	109.7	20	116	27.5	M30	110	109	130		347	165	98	84	4	M24	52	116	28
D.97..	119.7	20	127	31	M30	120	119	140		434	185	130	119	4	M24	52	127	32

Dismounting

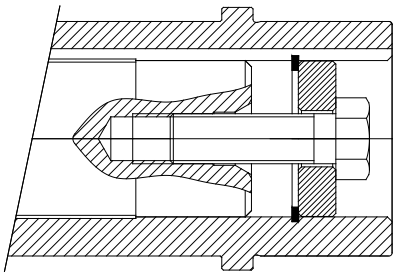

Mounting

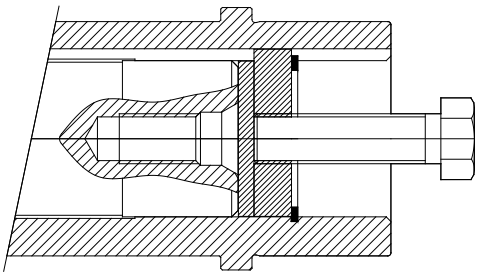

6 Contour Bolt
(DIN ISO 4014 . DIN ISO 4017)
(DIN ISO 8765)

7.7- D.07.. - D.97.. DIMENSIONS OF SPLINED HOLLOW SHAFT TO DIN 5480

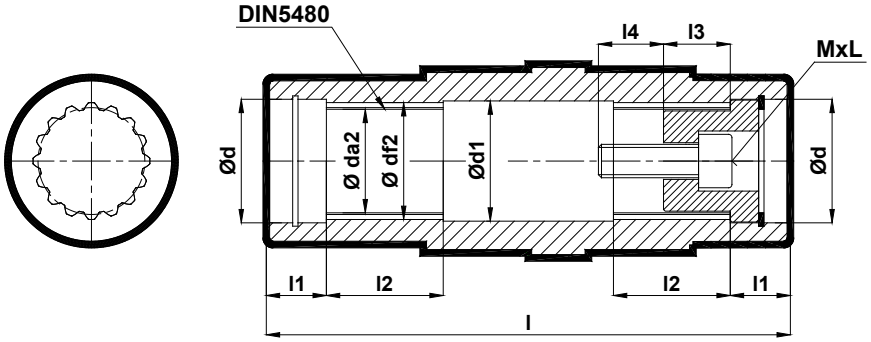

Type	DIN5480	ød	ød1	ød2	øda2	ødf2	l	l1	l2	l3	l4	MxL
D07	N25x1.25x30x18x9H	27	26	48	22.5	25.25	104	17	22	20	20	M10x30
D17	N30x1,25x30x22x9H	32	31	53	27,5	30,25	120	18	25	20	20	M10x30
D27 **D28**	N35x2x30x16x9H	37	36	58 63,5	31	35,4	157 166	18	35	20	20	M10x30
D37	N45x2x30x21x9H	47	46	74	41	45,4	185	25	45	24	32	M16x50
D47	N50x2x30x24x9H	55	51	84	46	50,4	215	25	55	24	32	M16x50
D57	N65x2x30x31x9H	72	66	104	61	65,4	246	25	65	30	40	M20x60
D67	N70x2x30x34x9H	72	71	119	66	70,4	308	25	75	30	40	M20x60
D77	N85x3x30x27x9H	90	86	139,5	79	85,6	363	26	90	30	40	M20x60
D87	N100x4x30x24x9H	110	101	169	92	100,8	428	30	105	41	50	M24x80
D97	N120x4x30x28x9H	130	121	179	112	120,8	500	35	120	41	50	M24x80

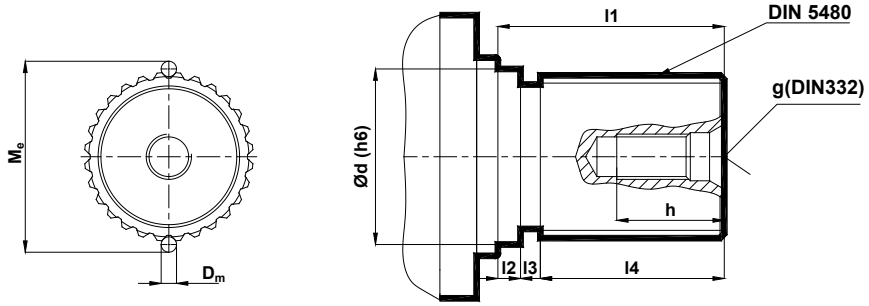

Type	DIN5480	ød	l1	l2	l3	l4	Me (Tolerances)	Dm	g (DIN332)
D07	W25x1,25x30x18x8f	27	44	10	7	27	28,01 (0/-0,03)	2.75	M10x24
D17	W30x1,25x30x22x8f	32	48	11	7	30	33,05 (0/-0,04)	2,75	M10x24
D27 **D28**	W35x2x30x16x8f	37	58	11	7	40	38,94 (0/-0,05)	4,00	M10x24
D37	W45x2x30x21x8f	47	75	18	7	50	48,88 (0/-0,05)	4,00	M16x38
D47	W50x2x30x24x8f	55	85	18	7	60	54,16 (0/-0,05)	4,00	M16x38
D57	W65x2x30x31x8f	72	95	17	8	70	68,99 (0/-0,06)	4,00	M20x44
D67	W70x2x30x34x8f	72	105	17	8	80	74,18 (0/-0,06)	4,00	M20x44
D77	W85x3x30x27x8f	90	121	16	10	95	91,02 (0/-0,05)	6,00	M20x44
D87	W100x4x30x24x8f	110	140	20	10	110	108,37 (0/-0,06)	8,00	M24x52
D97	W120x4x30x28x8f	130	160	23	12	125	127,89 (0/-0,06)	8,00	M24x52

7.8- Assembling customer shaft with shrink disk

7.8.1- Loosen the bolts of the shrink disk

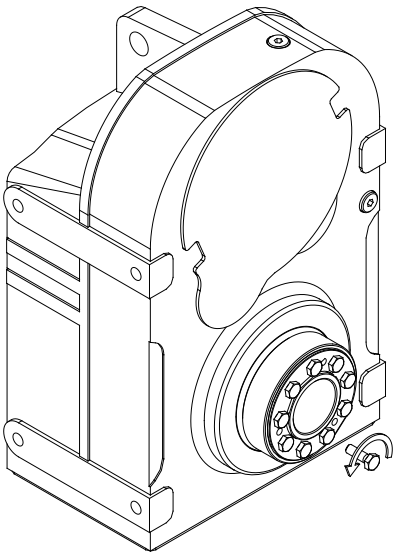

7.8.2- Use a commercially available solvent to clean all the dirt and oil from the shaft and shrink disk hollow. The surfaces must be free from oil or any dirt. The solvent must be removed from the surfaces as well.

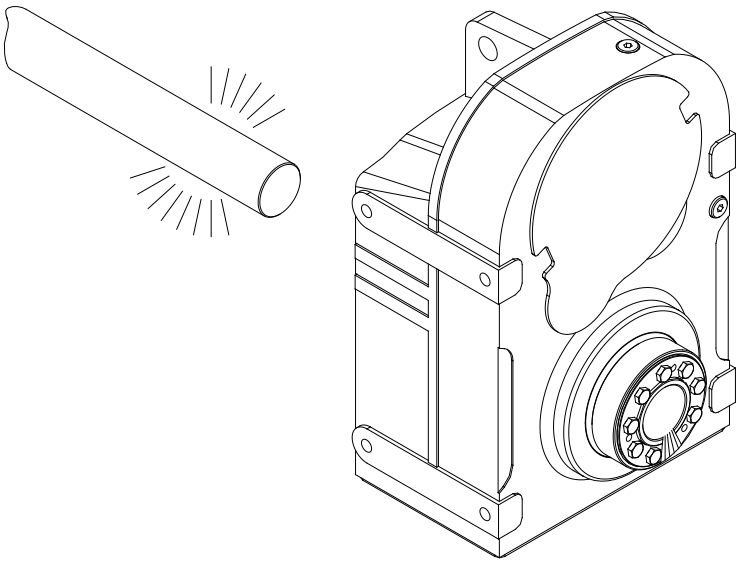

7.8.3- Insert the shaft and tighten the bolts as shown. Be sure that there is a clearance between the shrink disk shoulder and the hollow shaft shoulder of the gearbox.

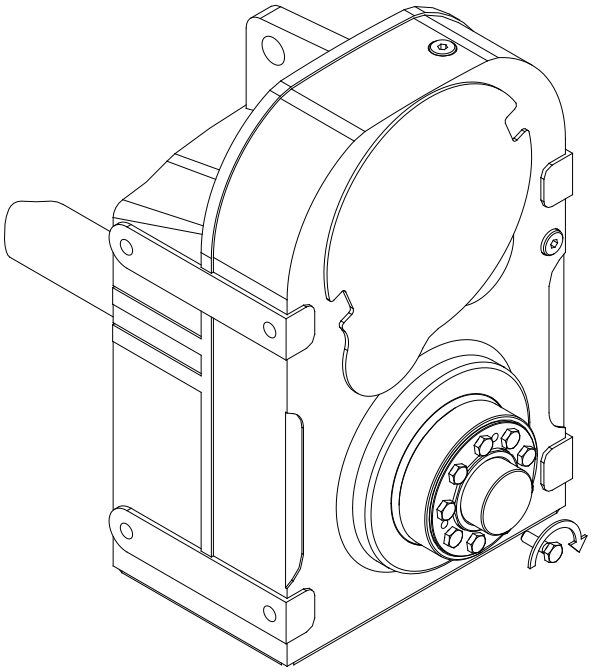

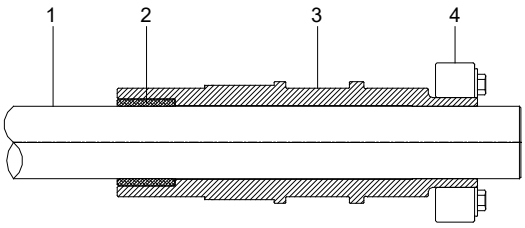

1- Customer Shaft
2- Bronze Ring
3- Hollow Shaft
4- Shrink Disk

Type	Bolt	Quantity	Tightening Torque [Nm]
D.07..	M5	6	4
D.17..	M6	5	12
D.27..	M6	7	12
D.28..	M6	8	12
D.37..	M6	8	12
D.47..	M6	10	12
D.57..	M8	7	30
D.67..	M8	7	30
D.77..	M10	9	59
D.87..	M12	10	100
D.97..	M12	12	100

7.9- Disassembling customer shaft with shrink disk

7.9.1- Loosen the bolts of the shrink disk and take out the shaft.

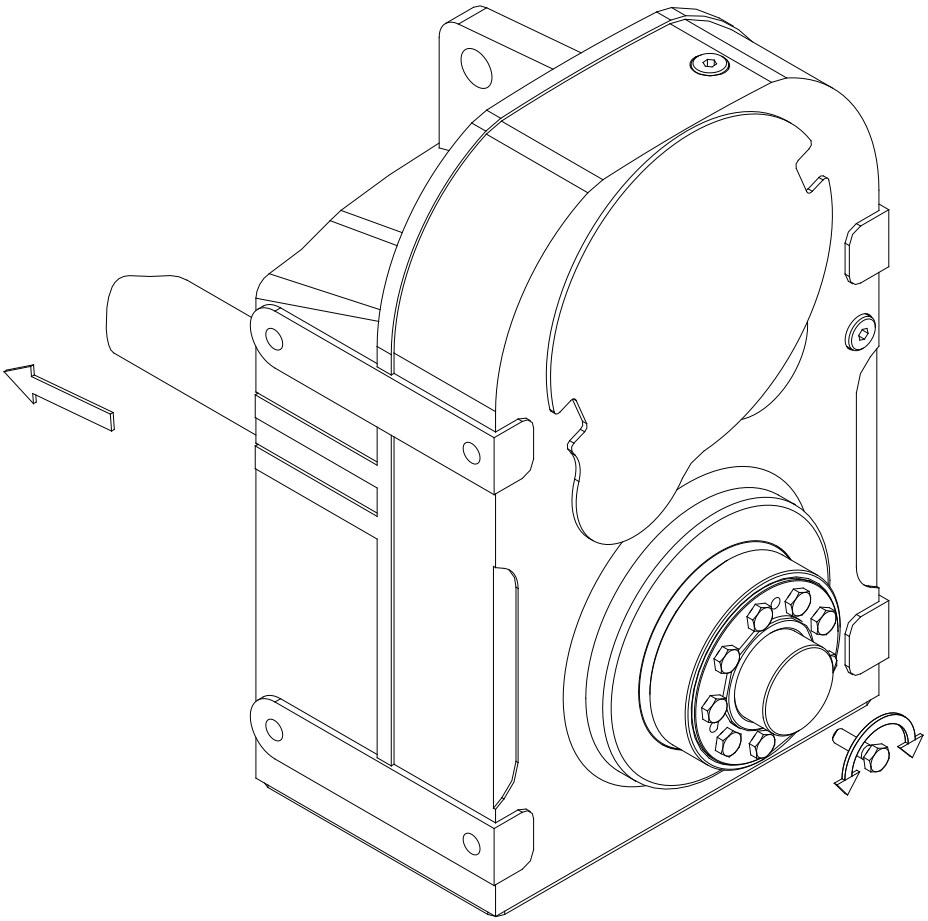

7.10- Assembling gear unit with torque arm

7.10.1- The mounting positions listed below are possible. Select a mounting position that suits your purpose.

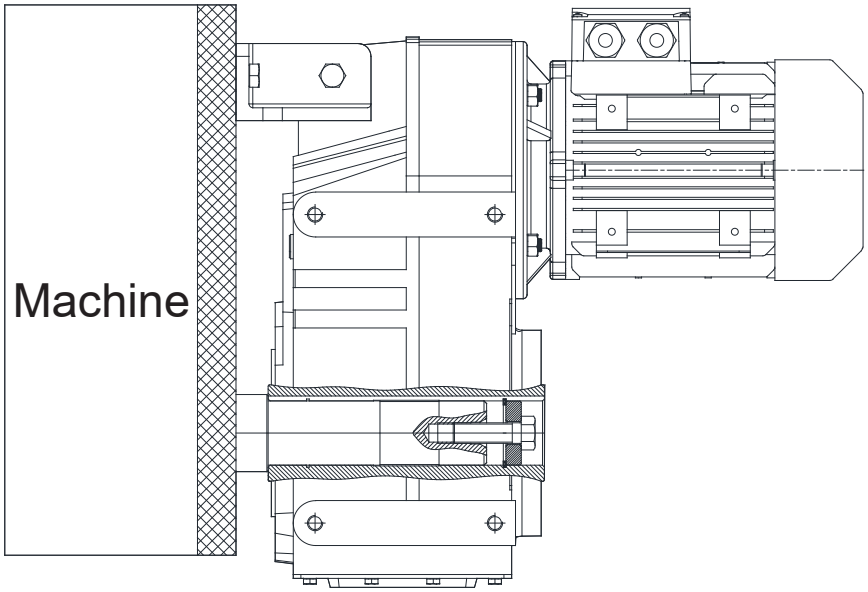

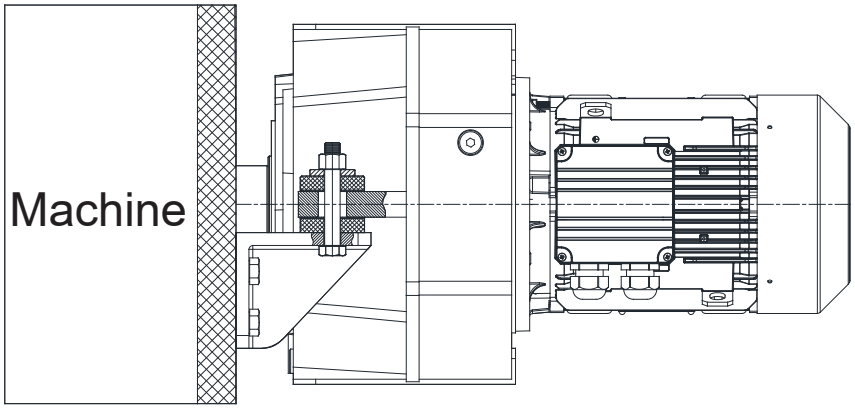

7.10.2- Assemble the parts as shown bellow

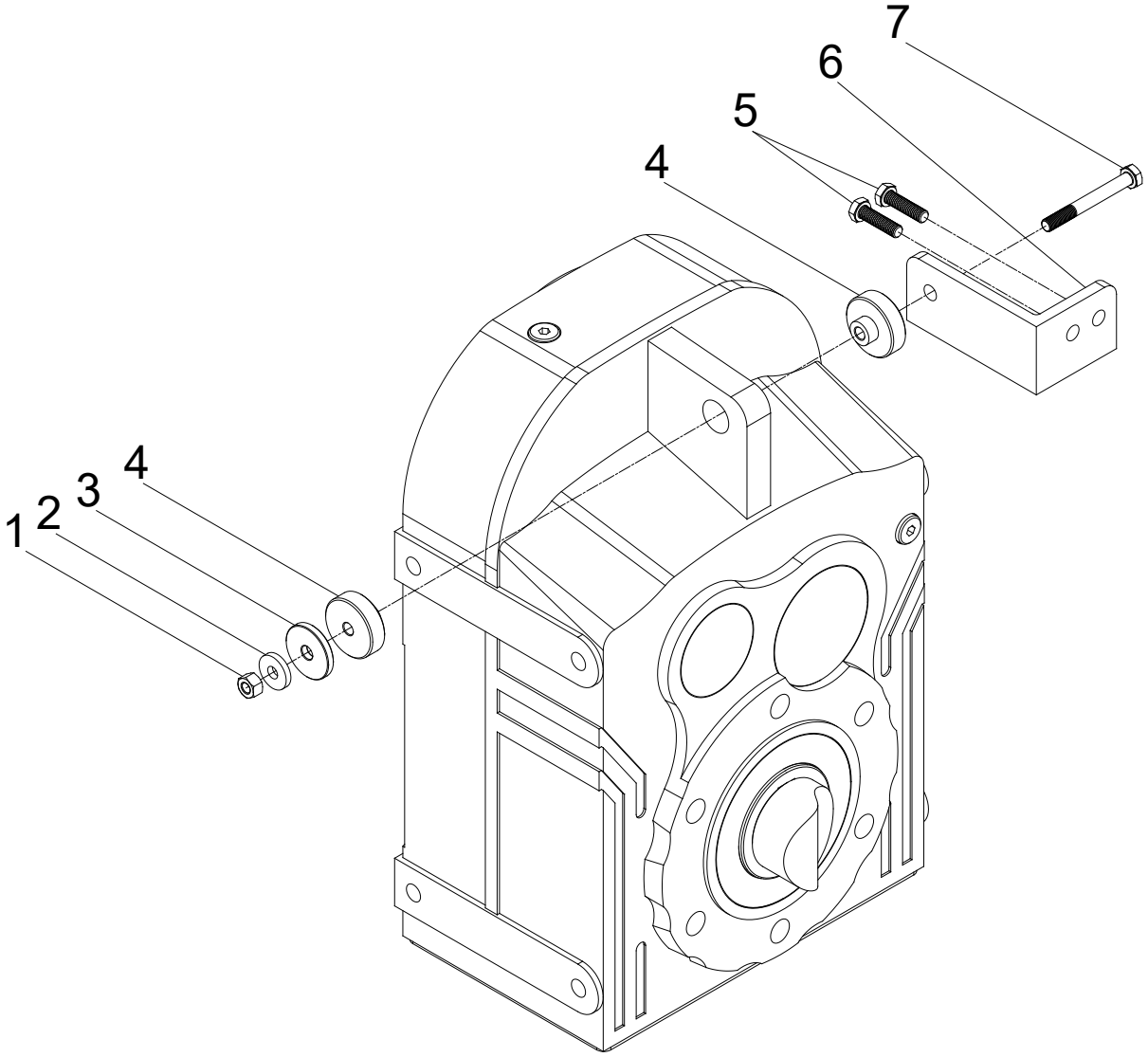

1- Bolt	4- Rubber Buffer	7- Bolt
2- Washer	5- Bolt	
3- Washer Ring	6- Fixing Plate	

7.10.3- For the fixing bolt position refer to the following dimensions.

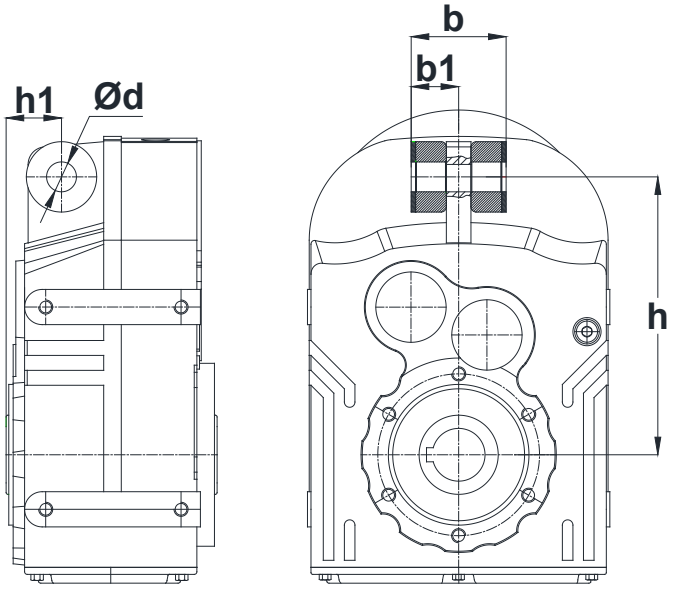

Type	d	b	b1	h	h1
D.07.	14	42	21	147	26.5
D.17.	17	54	27	158	31.5
D.27.	17	54	27	170	32
D.28.	17	54	27	198	40.5
D.37.	17	56	28	218	41
D.47.	22	80	40	278	50
D.57.	22	86	43	346	62
D.67.	26	110	55	395	70
D.77.	26	116	58	485	88
D.87.	32	160	80	550	110
D.97.	32	165	82.5	660	150

7.11- Fitting output shaft elements

Use the following illustration to assemble output shaft units

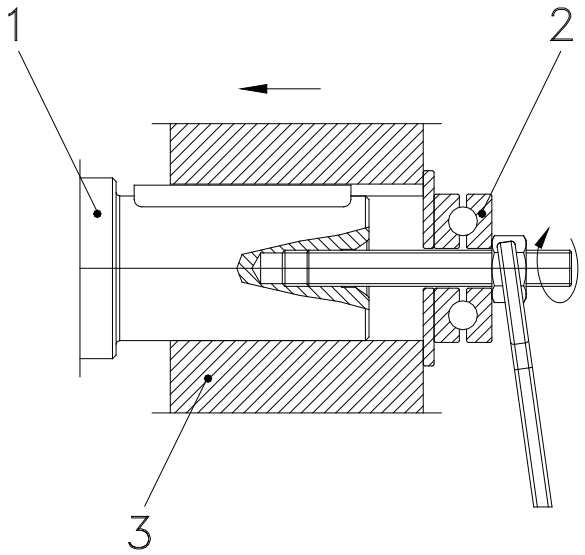

1) Gear shaft end
2) Thrust bearing
3) Coupling hub

7.12- Correct position of output shaft elements

The connecting elements at the gearbox outlet should be mounted as close as possible to the gearbox. The radial load resulting from the connection should act as close as possible to the gearbox.

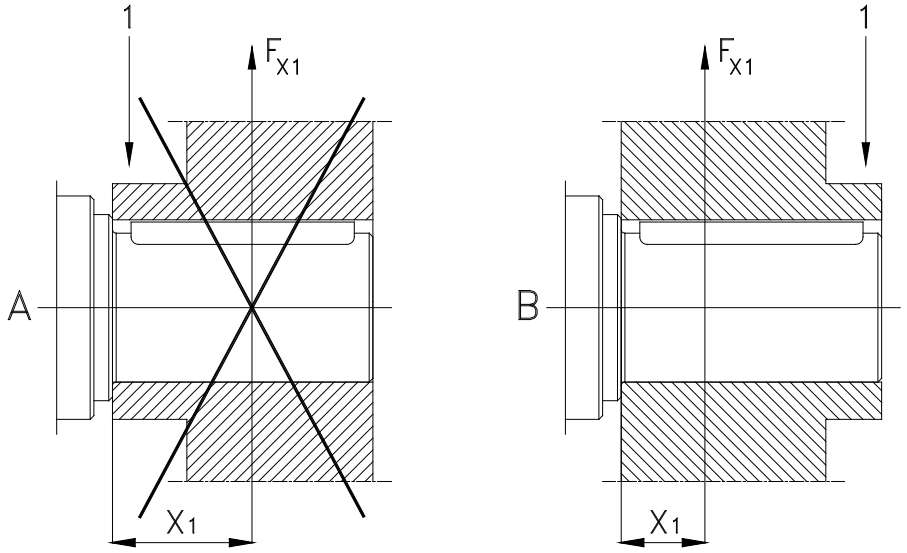

1) Hub

7.13- Fitting Couplings

7.13.1- When installing the coupling, please ensure that there is an air gap between the two elements.

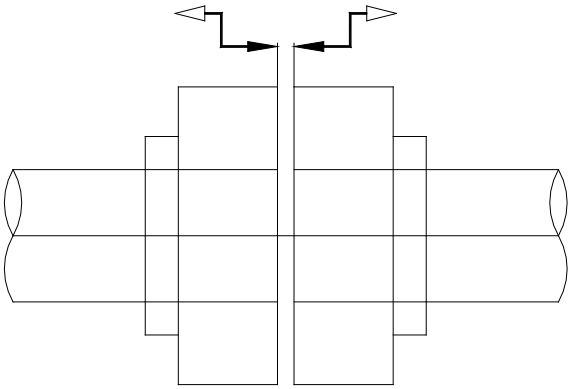

7.13.2- When installing the coupling, please observe the maximum permissible axial misalignment.

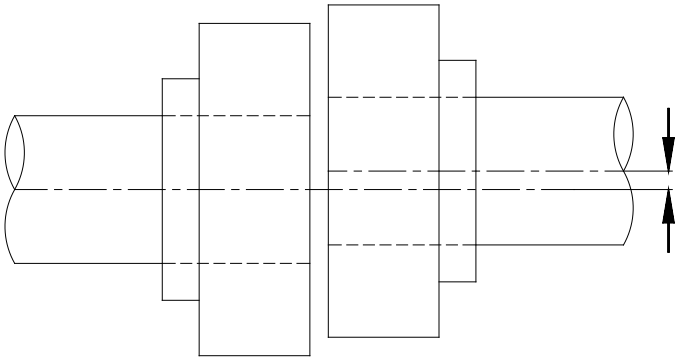

7.13.3- When installing the coupling, please observe the maximum permissible angular displacement.

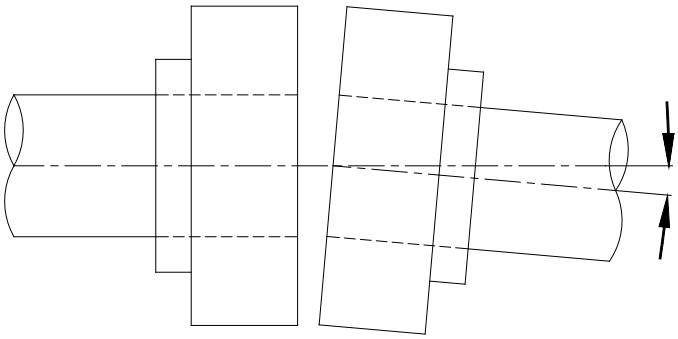

8- Maintenance and Inspections

Under normal ambient and operating conditions, the gear units should be inspected at the intervals listed in the table below.

Item to check /replace	Every 3.000 working hours or every 6 months	Every 4.000 working hours	Every 10.000 working hours or every 3 years	Every 25.000 working hours
Check for oil leakage	x			
Check for oil level	x			
Check oil leakage from seal	x			
Check Rubber buffer	x (Change if necessary)			
Check Bearings Noise		x (Change if necessary)		
Change Mineral Oil			x (See Below for details)	
Change Synthetic-PAO Oil				x (See Below for details)
Change Sealing				x
Change Bearing Grease				x
Change Bearings				x
Check for noise Changes				x

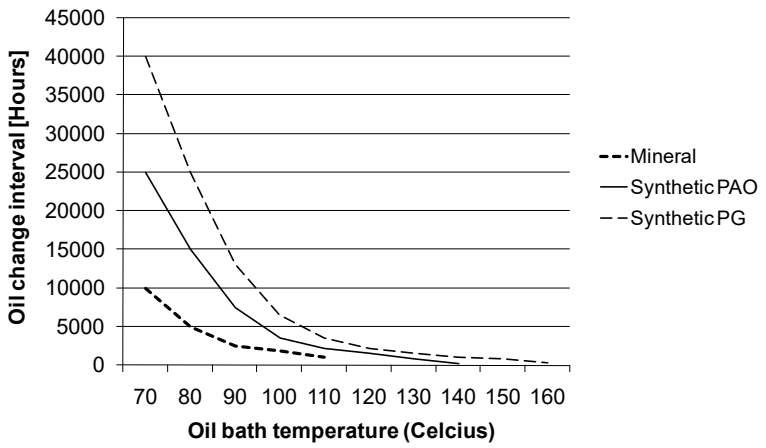

For normal ambient conditions 70 °C oil bath temperature should be taken as reference

* For D series mineral oil is used unless it is differently ordered. For oil type and quantities refer to the following table.

9- Lubrication

9.1- Oil Types

Lubricant	DIN 51517-3	Ambient Temperature [ºC]		ISO VG	Aral	Beyond Petroleum	Castrol	Klüber Lubrication	Mobil	Shell	Total
		Dip Lubri-cation	Forced Lubrica-tion								
Mineral Oil	CLP	0 ... +50	–	680	Degol BG 680	Energol GR-XP 680	Alpha SP 680	Klüberoil GEM 1-680 N	Mobilgear XMP 680	Omala 680	Carter EP 680
		-5 ... +45	–	460	Degol BG 460	Energol GR-XP 460	Alpha SP 460	Klüberoil GEM 1-460 N	Mobilgear XMP 460	Omala F460	Carter EP 460
		-10 ... +40	+15 ... +40	320	Degol BG 320	Energol GR-XP 320	Alpha SP 320	Klüberoil GEM 1-320 N	Mobilgear XMP 320	Omala F320	Carter EP 320
		-15 ... +30	+10 ... +30	220	Degol BG 220	Energol GR-XP 220	Alpha SP 220	Klüberoil GEM 1-220 N	Mobilgear XMP 220	Omala F220	Carter EP 220
		-20 ... +20	+5 ... +20	150	Degol BG 150	Energol GR-XP 150	Alpha SP 150	Klüberoil GEM 1-150 N	Mobilgear XMP 150	Omala 150	Carter EP 150
		-25... +10	+3 ... +10	100	Degol BG 100	Energol GR-XP 100	Alpha SP 100	Klüberoil GEM 1-100 N	–	Omala 100	Carter EP 100
Synthetic Oil	CLP PG	-10 ... +60	–	680	Degol GS 680	Energsyn SG-XP 680	–	Klübersynth GH 6 -680	Mobil Glygoyle 680	Tivela S 680	Carter SY 680
		-20 ... +50	–	460	Degol GS 460	Energsyn SG-XP 460	Aphasyn PG 460	Klübersynth GH 6 -460	Mobil Glygoyle 460	Tivela S 460	Carter SY 460
		-25 ... +40	+5 ... +40	320	Degol GS 320	Energsyn SG-XP 320	Aphasyn PG 320	Klübersynth GH 6 -320	Mobil Glygoyle 320	Tivela S 320	Carter SY 320
		-30 ...+30	0 ...+30	220	Degol GS 220	Energsyn SG-XP 220	Aphasyn PG 220	Klübersynth GH 6 -220	–	Tivela S 220	Carter SY 220
		-35 ... +20	-5 ... +20	150	Degol GS 150	Energsyn SG-XP 150	Aphasyn PG 150	Klübersynth GH 6 -150	–	Tivela S 150	Carter SY 150
		-40 ... +10	-8 ... +10	100	–	–	–	Klübersynth GH 6 -100	–	–	–
	CLP HC	-10 ... +60	–	680	–	–	–	Klübersynth GEM 4-680 N	Mobilgear SHC XMP 680	–	Carter SH 680
		-20 ... +50	–	460	Degol PAS 460	Enersyn EP-XF 460	Alphasyn T 460	Klübersynth GEM 4-460 N	Mobilgear SHC XMP 460	Omala HD 460	Carter SH 460
		-25 ... +40	+5 ... +40	320	Degol PAS 320	Enersyn EP-XF 320	Alphasyn T 320	Klübersynth GEM 4-320 N	Mobilgear SHC XMP 320	Omala HD 320	Carter SH 320
		-30 ... +30	0 ...+30	220	Degol PAS 220	Enersyn EP-XF 220	Alphasyn T 220	Klübersynth GEM 4-220 N	Mobilgear SHC XMP 220	Omala HD 220	Carter SH 220
		-35 ... +20	-5 ... +20	150	Degol PAS 150	Enersyn EP-XF 150	Alphasyn T 150	Klübersynth GEM 4-150 N	Mobilgear SHC XMP 150	Omala HD 150	Carter SH 150
		-40 ... +10	-8 ... +10	100	–	–	–	Klübersynth GEM 4-100 N	–	–	–
Food Grade Oil	CLP NSF H1	-15 ... +25	+5 ... +25	220	–	–	Optileb GT 220	Klüberoil 4 UH1-220 N	Mobil SHC Cibus 220	Cassida Fluid GL-220	Nevastane SL 220
Biodegra-dable Oil	CLP E	-25 ... +40	+5 ... +40	320	–	–	Tribol BioTop 1418-320	Klübersynth GEM 2-320	–	–	Carter Bio 320
Mineral Grease [-20 .... +120 Working Temperature ºC]					Aralub HL3	Energrease LS 3	Spheerol AP3	Centoplex 2 EP	Mobilux EP 3	Alvania RL3	Multis Complex EP 2
Synthetic Grease [-30 .... +100 Working Temperature ºC]					–	Energrease SY 2202	–	Petamo GHY 133 N	Mobiltemp SHC 100	Cassida RLS 2	Multis Complex SHD 220

9.2- Changing the oil

In the operating instructions you can find the required oil filling quantity.

-*Do not mix synthetic oils with mineral oils which will cause serious damage to the gear unit. The oil change must be done by using the filling, draining and level plugs according the mounting position illustrated in section 9.4.*

- Extended, intensive contact with oils can lead to skin irritations.
Avoid extended contact with oil, and clean oil off skin thorough.

- Hot oil can cause scalding.
When changing oil, protect yourself against contacting hot oil.

9.3 Mounting Positions

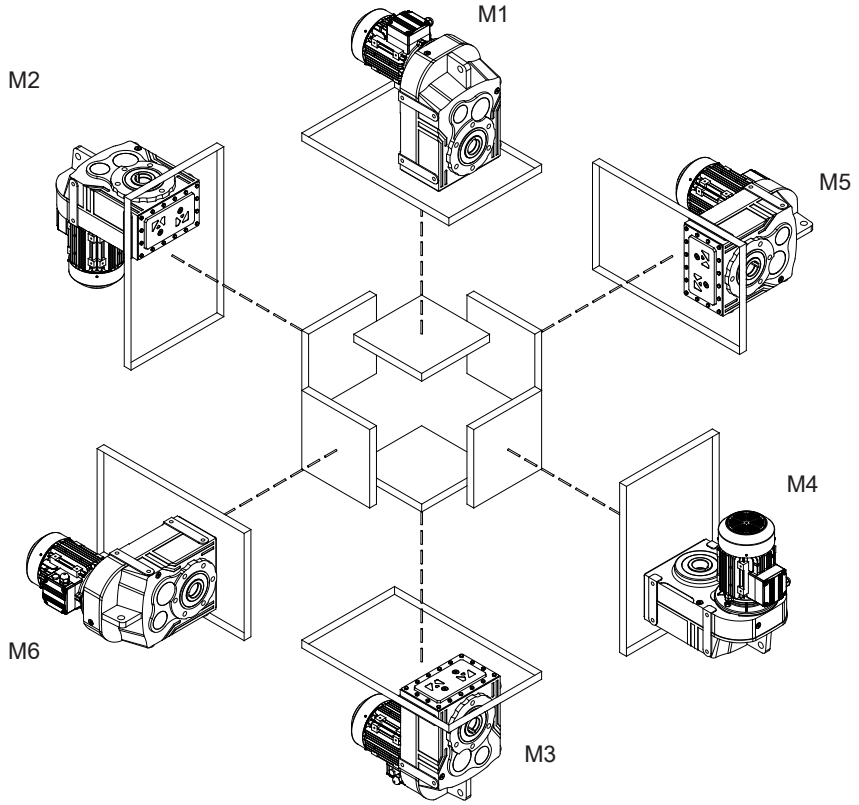

The mounting position of M1 to M6 depends on the mounting position of the gear unit. The mounting surfaces are not binding.

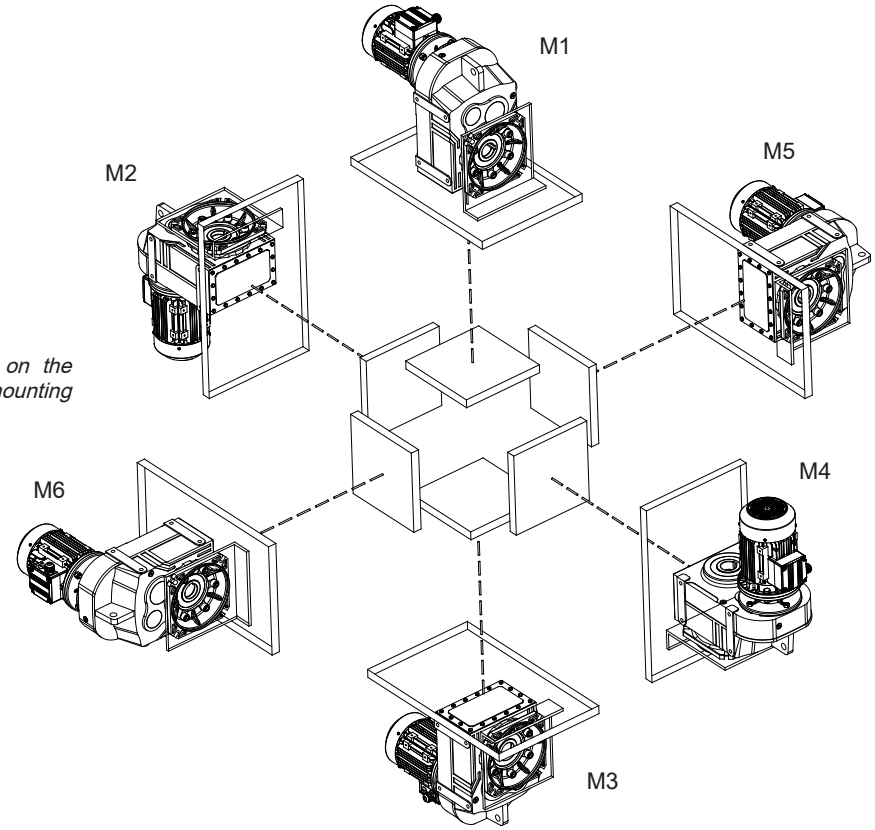

The mounting position of M1 to M6 depends on the mounting position of the gear unit. The mounting surfaces are not binding.

9.4 Oil Plugs and Oil Quantities:
D Series 2-3 Stage Oil Level Plugs:

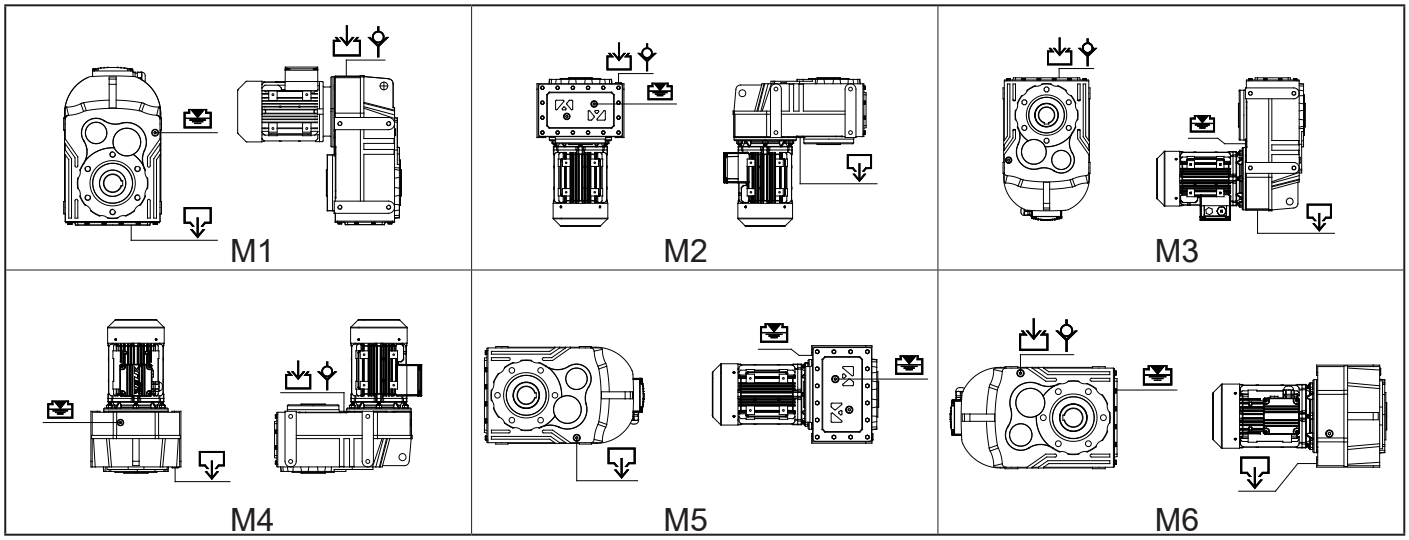

Oil Quantities (l)

Type	M1	M2	M3	M4	M5	M6
DR072	0.95	1.1	0.8	1.1	1.0	0.9
DR073	0.9	1.0	0.7	1.0	0.9	0.85
DR172	1.3	1.5	1.0	1.6	1.4	1.3
DR173	1.0	1.3	0.8	1.55	1.2	1.2
DR272	1.9	2.2	1.3	2.5	2.0	1.95
DR273	1.8	2.0	1.2	2.0	2.0	2.0
DR282	2.4	3.0	2.0	2.9	2.7	2.7
DR283	2.3	2.9	1.8	2.6	2.3	2.5
DR372	3.2	3.7	2.4	3.6	3.5	3.4
DR373	3.0	3.7	2.0	3.5	3.3	3.3
DR472	6.8	7.0	4.6	7.5	6.5	6.5
DR473	6.4	7.0	4.0	6.6	6.5	6.5
DR572	11.4	12.7	8.6	15.0	11.9	11.6
DR573	11.2	12.4	8.0	12.5	11.5	11.5
DR672	22.0	27.0	16.0	27.0	22.8	22.5
DR673	21.0	25.2	14.0	26.5	21.5	21.0
DR772	34.0	37.0	26.0	44.0	35.0	34.5
DR773	32.0	35.0	21.0	40.0	33.0	32.5
DR872	53.0	58.0	43.0	67.0	55.0	54.0
DR873	48.5	53.0	39.0	61.0	50.0	49.0
DR972	87.0	113.0	80.5	117.0	97.0	95.0
DR973	84.0	110.0	77.0	112.0	93.0	89.0

Symbols : : Drain Plug : Oil Filling : Vent Plug : Oil Level

Oil Plugs and Oil Quantities
D Series 4 Stage Oil Level Plugs

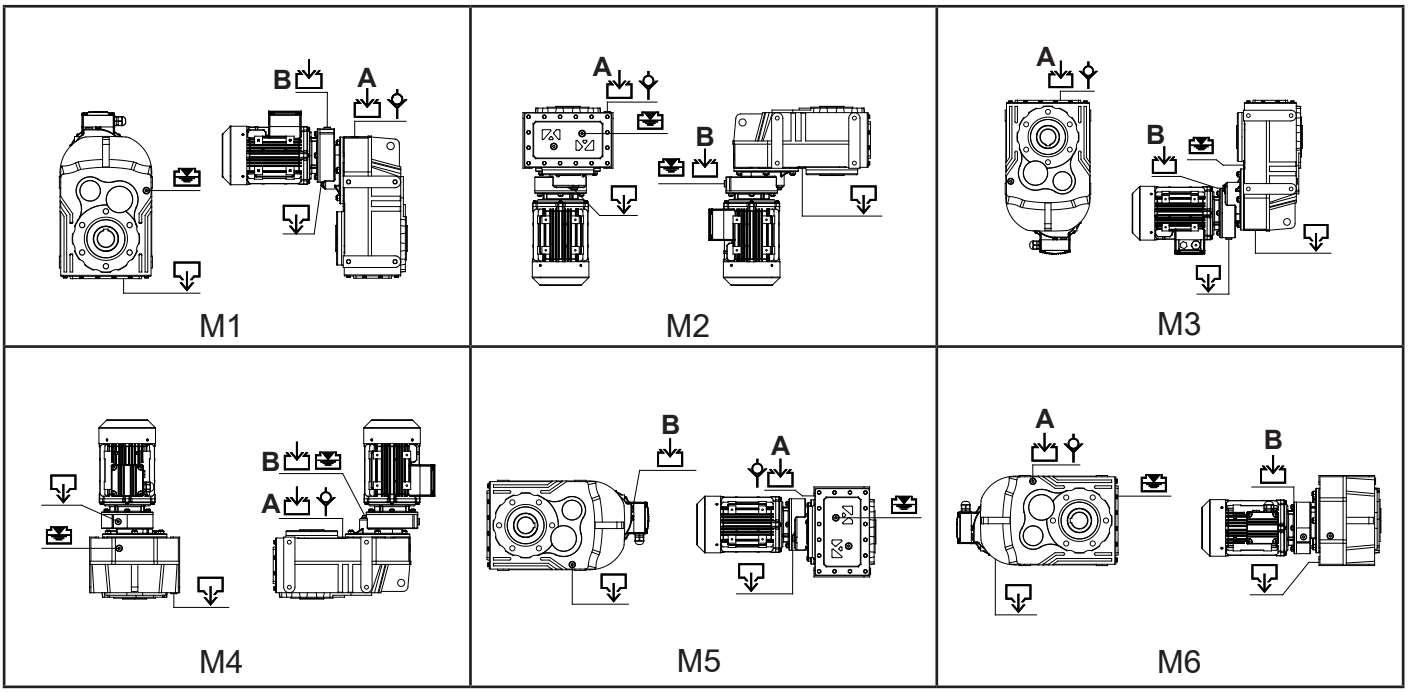

Oil Quantities (l)

Type	M1 A / B	M2 A / B	M3 A / B	M4 A / B	M5 A / B	M6 A / B
DR474	6.4/ 0.25	7.0 / 0.25	4.0 / 0.25	6.6 / 0.25	6.5 / 0.25	6.5 / 0.25
DR574	11.2 / 0.4	12.4 / 0.4	8.0 / 0.4	12.5 / 0.4	11.5 / 0.4	11.5 / 0.4
DR674	21.0 / 0.5	25.2 / 0.5	14.0 / 0.5	26.5 / 0.5	21.5 / 0.5	21.0 / 0.5
DR774	32.0 / 0.9	35.0 / 0.9	21.0 / 0.9	40.0 / 0.9	33.0 / 0.9	32.5 / 0.9
DR874	48.5 / 3.5	53.0 / 3.5	39.0 / 3.5	61.0 / 3.5	50.0 / 3.5	49.0 / 3.5
DR974	84.0 / 5.0	110.0 / 5.0	77.0 / 5.0	112.0 / 5.0	93.0 / 5.0	89.0 / 5.0

Symbols : : Drain Plug : Oil Filling : Vent Plug : Oil Level

9.4 Oil Plugs and Oil Quantities:
D Series 5-6 Stage Oil Level Plugs:

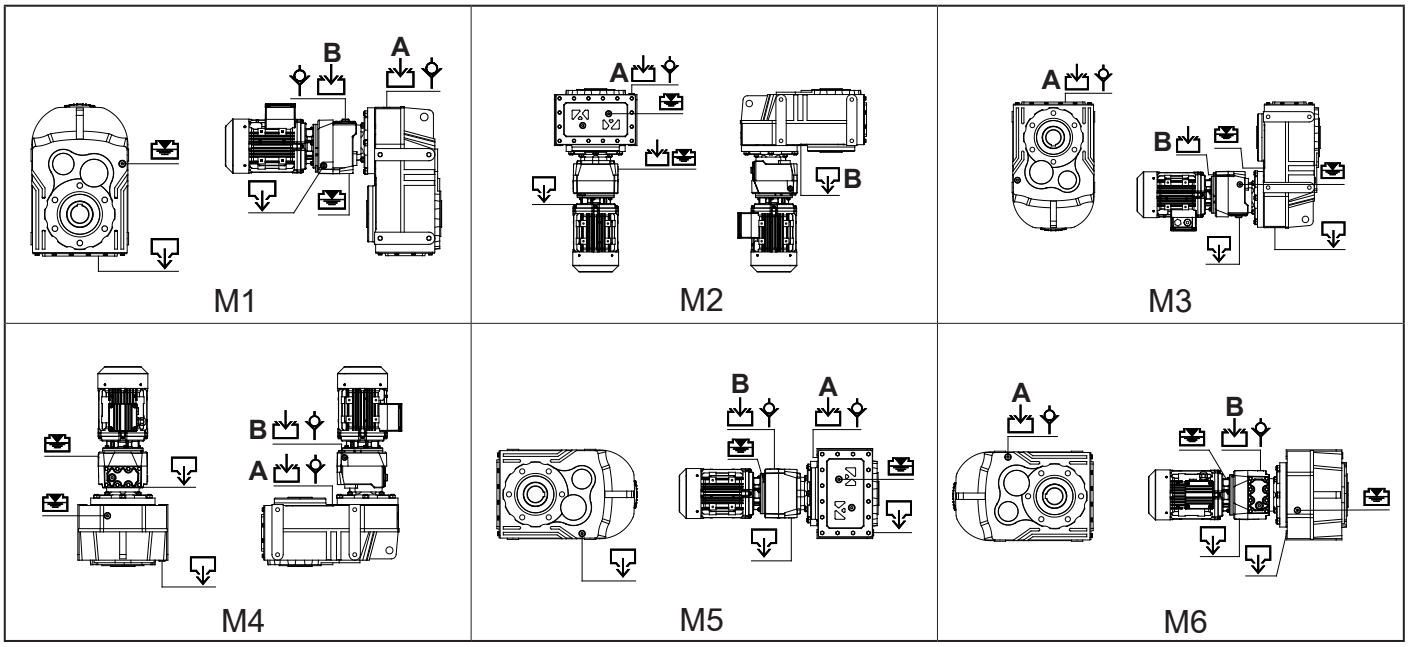

Oil Quantities (l)

Type	M1 A / B	M2 A / B	M3 A / B	M4 A / B	M5 A / B	M6 A / B
DR275	1.8 / 0.4	2.0 / 0.6	1.2 / 0.5	2.0 / 0.6	2.0 / 0.5	2.0 / 0.5
DR276	1.8 / 0.35	2.0 / 0.55	1.2 / 0.5	2.0 / 0.55	2.0 / 0.4	2.0 / 0.4
DR285	2.3 / 0.4	2.9 / 0.6	1.8 / 0.5	2.6/ 0.6	2.3 / 0.5	2.5 / 0.5
DR286	2.3 / 0.35	2.9 / 0.55	1.8 / 0.5	2.6 / 0.55	2.3 / 0.4	2.5 / 0.4
DR375	3.0 / 0.4	3.7 / 0.6	2.0 / 0.5	3.5 / 0.6	3.3 / 0.5	3.3 / 0.5
DR376	3.0 / 0.35	3.7 / 0.55	2.0 / 0.5	3.5 / 0.55	3.3 / 0.4	3.3 / 0.4
DR475	6.4 / 0.65	7.0 / 0.95	4.0 / 0.7	6.6 / 0.95	6.5 / 0.7	6.5 / 0.7
DR476	6.4 / 0.6	7.0 / 0.8	4.0 / 0.7	6.6 / 0.8	6.5 / 0.65	6.5 / 0.65
DR575	11.2 / 1.2	12.4 / 2.1	8.0 / 2.0	12.5 / 2.1	11.5 / 1.4	11.5 / 1.4
DR576	11.2 / 1.1	12.4 / 2.0	8.0 / 1.9	12.5 / 2.0	11.5 / 1.3	11.5 / 1.3
DR675	21.0 / 1.2	25.2 / 2.1	14.0 / 2.0	26.5 / 2.1	21.5 / 1.4	21.0 / 1.4
DR676	21.0 / 1.1	25.2 / 2.0	14.0 / 1.9	26.5 / 2.0	21.5 / 1.3	21.0 / 1.3
DR775	32.0 / 2.0	35.0 / 3.4	21.0 / 3.1	40.0 / 3.4	33.0 / 2.8	32.5 / 2.8
DR776	32.0 / 1.9	35.0 / 3.3	21.0 / 3.0	40.0 / 3.3	33.0 / 2.6	32.5 / 2.6
DR875	48.5 / 2.0	53.0 / 3.4	39.0 / 3.1	61.0 / 3.4	50.0 / 2.8	49.0 / 2.8
DR876	48.5 / 1.9	53.0 / 3.3	39.0 / 3.0	61.0 / 3.3	50.0 / 2.6	49.0 / 2,6
DR975	84.0 / 4.5	110 / 7.5	77.0 / 7.5	112 / 7.5	93.0 / 5.5	89.0 / 5.5
DR976	84.0 / 4.0	110 / 7.0	77.0 / 7.0	112 / 7.0	93.0 / 5.0	89.0 / 5.0

Symbols : : Drain Plug : Oil Filling : Vent Plug : Oil Level

10- Troubleshooting Guide

All instructions recommended below must be carried out by professionally trained mechanics or electricians. SEVA-tec must be informed before any modification is made to the gear unit. An oil change can be carried out without consultation. All modifications or executions without the knowledge of SEVA-tec are at the user's own risk.

ID	Problem	Observation	Remedy
001	Gearbox Does Not Start Up	You hear no noise and shaft is not turning. You are not using any driver or frequency inverter.	Please Check the voltage supply and frequency of your electric connection. They must be in accordance with the nameplate of the motor. Observe motor manufacturers start up manual. Still does not work go to ID 100
002	Gearbox Does Not Start Up	You hear no noise and shaft is not turning. You are using frequency inverter or driver.	Please observe the frequency inverter/driver manual. Check the motor by connecting the motor directly to the supply voltage to determine if the problem is with the inverter. If you are still having issues, go to ID001.
003	Gearbox Does Not Start Up	You hear some noises, but the motor and the gear shaft are not rotating.You are not using any driver/ frequency inverter or brake motor.	Please Check the voltage supply and frequency of your electric connection. They must be in accordance with the nameplate of the motor. Observe motor manufacturers start up manual. If the same problem persists, the load may be too great for the chosen motor. Loosen the gearbox from the load/torque. If this works, the starting torque is insufficient and higher motor power is needed. For monophaze motors, check the star-ting up condansator and running condansator as well. If notting helps go to ID 100
004	Gearbox Does Not Start Up	You hear some noise but both motor shaft and gearbox shaft is not turning. You are using driver or frequency inverter.	Please observe the frequency inverters or drivers manual. To determine the source of the fault, disconnect the motor from the converter. Connect the motor directly to the mains including safety devices. If you are still having issues, go to ID 100.
005	Gearbox Does Not Start Up	You hear some noise but both motor shaft and gearbox shaft is not turning. You are using braked motor	Please check the supply voltage and frequency of the mains connection. These values should be according to the nameplate of the gear motor. Check the operating instructions of the motor manufacturer. Make sure that the brake is in order. Examine the operating instructions of the motor brake. If no solution is found, supply power to the brake individually, for example 198V DC. If a clicking sound is heard, the brake will open. If you do not hear this sound, the brake or the rectifier is damaged. When the brake is active, the motor is supplied with voltage. If the problem persists, the motor may be oversized for the load. Go to ID 003.

ID	Problem	Observation	Remedy
006	Gearbox Does Not Work in Low Speeds/ frequencies.	You are using frequency inverter.	At low speeds, the motors frequency is too low. The parameters of the motor and the inverter must be optimised. The efficiency of the gearbox may be too low at low speed, especially for helical worm gear units. The recommended frequency range is 20-70Hz for helical worm gear units, 10-70 Hz for helical gear units. Use a stronger motor power or change the gear ratio of the gearbox to operate in the recommended frequency range.
007	Transmission does not start in the morning or after the long break	Ambient Temperature is below +5 Celsius	The oil is not in accordance with your working conditions. Change to lower viscosity oils. Refer to the owner's manual for the correct oil selection. Control the engine ambient temperature with a heater. If the problem persists, select an engine with higher power.
008	Gearbox is Heating Up too Much	The gearbox is used below 40 °C ambient temperature.	Measure the surface temperature of the gearbox under full load. If the temperature is below 80°C, it is OK. All ATEX certified gearboxes are designed to operate below 120°C. If the ambient temperature of ATEX gearboxes is above 120°C, be sure to shut down the operation and contact SEVA-tec. If a gearbox without ATEX certification is operated above 80°C ambient temperature, check the lubrication type and oil quantity according to the mounting position. Check the mounting position on the gearbox nameplate. If it does not match the current mounting position, go to ID 100.
009	Gearbox is Heating Up too Much	You are using Helical Gear Box. Ambient temp is lower than +40 Celsius	Measure the surface temperature of the gearbox under full load. If the temperature is below 80°C, it is OK. All ATEX certified gearboxes are designed to operate below 120°C. If the ambient temperature of ATEX gearboxes is above 120°C, be sure to shut down the operation and contact SEVA-tec. If a gearbox without ATEX certification is operated above 80°C ambient temperature, check the lubrication type and oil quantity according to the mounting position. Check the mounting position on the gearbox nameplate. If it does not match the current mounting position, go to ID 100.
010	Gearbox is Heating Up too Much	Ambient Temp is over +40 Celsius	Standard gearboxes are designed for ambient temperatures below 40°C. If the ambient temperature is above 40°C, a special solution must be used. Please contact SEVA-tec GmbH.
011	Gearbox is noisy	Noise is regular and continuous	Check Your moving parts for noise. Disassemble the gearbox and run without load. If you still hear the noise motor bearings or gearbox bearings are defect. Change bearings. Go to ID 100
012	Gearbox is noisy	Noise is random	Check Your moving parts for noise. Disassemble the gearbox and run without load. If the noise is still audible in this case, there may be particles in the oil of the gearbox. Change the oil and check it. If there are metal particles in the oil, the gearbox is damaged. Go to ID100.

Troubleshooting Guide

ID	Problem	Observation	Remedy
013	Gearbox is noisy	Regular knocking noise	Check Your moving parts for noise. Disassemble the gearbox and run without load. If you still hear the noise one of the gears inside is defect. Go to ID 100
014	Gearbox is noisy	Regular noise increase and decrease	Check the output shaft for concentricity. Disconnect the gearbox from the machine. If you continue to hear the noise, one of the gears probably has a runout. Follow ID 100.
015	Gearbox is noisy	Gear motor with brake makes irregular noises.	Low random clicking noise may come from the brake disk, which is fine. If the noise level is too high, the brake may be defective or the air gap of the brake disk needs adjustment.
016	Gearbox is noisy	An inverter is used and the volume changes according to the speed.	The parameters of the frequency inverter are not optimised for the frequency range of the motor used. Read the operating instructions of the converter. If the problem persists, possibly change the transmission ratio of the gearbox. Follow ID 100.
017	Oil is Leaking	Oil Leakage from Seal	IIf the ambient temperature is over 40 °C or the operating time without a break is over 16 hours, please fit a breather screw. To do this, read the gearbox bleeding instructions. If it does not help either, a seal may be damaged. Follow ID 100.
018	Oil is Leaking	Oil Leakage from Plug	Check the position of the vent screw. In every assembly position, the vent screw should be in the uppermost position. The screw is sometimes not tight enough. There are some particles sitting under the rubber surface of the screw. Clean and reassemble the screw. If the problem continues, go to ID 100.
019	Oil is Leaking	Oil Leakage from Housing	Find the place where the oil is leaking. It may be that the oil is coming out of the seal or the vent but is flowing over the housing. If this is the case, go to ID018/019. If you are sure that the oil is coming out of the housing, the housing may have a micro-crack. Go to ID 100.
020	Oil is Leaking	Oil Leakage from Cover	The seal under the lid is damaged. Remove the lid and replace the seal. Fit the cover and tighten the cover screws. If the problem is not solved, go to ID 100.
021	Gearbox has regular runout	A torque arm is used	The concentricity error of the gearbox is caused by the connection point. The air gap between the shaft and the hub does not have a proper fit. It has negative influences on the gearbox, especially when using a torque arm.
022	Gearbox has random runout	You are using Torque Arm	The concentricity error of the gearbox is caused by the connection point. The air gap between the shaft and the hub does not have a proper fit. It has negative influences on the gearbox, especially when using a torque arm.
023	Motor is heating up	Motor is running over its nominal current	The motor power is not enough or some overload to the motor is possible. The motor may be defect. Go to ID 100
024	Motor is heating up	Ambient is dusty	Check the self-cooling via the motor ribs. If a frequency inverter is used, a forced cooling fan may be necessary at low speed. Go to ID 100.

ID	Problem	Observation	Remedy
025	Motor is running but Gearbox shaft does not turn	Friction noise occurs	Some elements (gears, shafts) may be defective. Go to ID 10.
026	Gearbox Housing is Defect	You are using chain drive or pinion gear	The radial load or poligon effect of the chain may have caused the damage. Check also if the assembly bolts are loosened or the plate you assemble the gearbox is rigit enough. Check if you are using the correct diameter of chain drive and you are not exceeding max. allowed radial load. Check the position of your output element and re-calculate your radyal load and check if this fit to the maximum allowed radial load. Goto ID 100
027	Output Shaft is Defect	You are using chain drive or pinion gear	The radial load or poligon effect of the chain may have caused the damage. Check the position of your output element and re-calculate your radial load and check if this fits into the maximum allowed radial load. Go to ID 100.
028	Gearbox is stopping too late	A brake motor is used	Please check the wiring diagram of the brake. There are two different kind of brake wiring diagram. The standart gearbox delivered from our factory is set to delayed braking. For sudden braking check the wiring diagram.
029	Gearbox is starting too late	You are using braked motor	For fast opening of big brakes (over 100Nm), you may need shock transformators which is supplied by SEVA-tec GmbH. Goto ID 100
100	Service Required	No self solution found	Please contact SEVA-tec. The contact details can be found on each page of these operating instructions. Changes to mechanical parts can only be carried out by SEVA-tec or with its consent. The warranty will be invalidated if changes are made without consent.

11- Disposal

If your product is no longer of use and you wish to dispose of it, refer to the instructions here. If you have any questions regarding ecological disposal methods, please consult our service points given on the backside of this manual.

11.1- Disposal of Oil

-Lubricants (oil and greases) are hazardous substances, which can contaminate soil and water. Collect drained lubricant into suitable receptacles and dispose of it according to the valid national guidlines.

11.2-Disposal of the Seals

Remove the sealing rings from the gear unit and remove oil and grease residues. Dispose of the sealings as composite material (metal/plastic)

11.3-Disposal of Metal

If possible, separate the gear material into iron, aluminium and other materials. Dispose of it according to the valid national guidelines.